omega
roof systems

axces
lifting systems

penta
slider systems

kits
in box systems

omega
roof systems

Type of rail	Page
Alto Trike	5
Alto Trike Light	13
Duo Trike	21
Duo Trike Light	29
Kubus Trike	37
Kubus Trike Light	45
Micro Trike	53
Alto Penta	61
Duo Penta	69
Plano	77
Pico	85
Ferro	91
Euro	99
Solo Trike	107
Solo Penta	115
Options & Variations	123

omega
alto trike

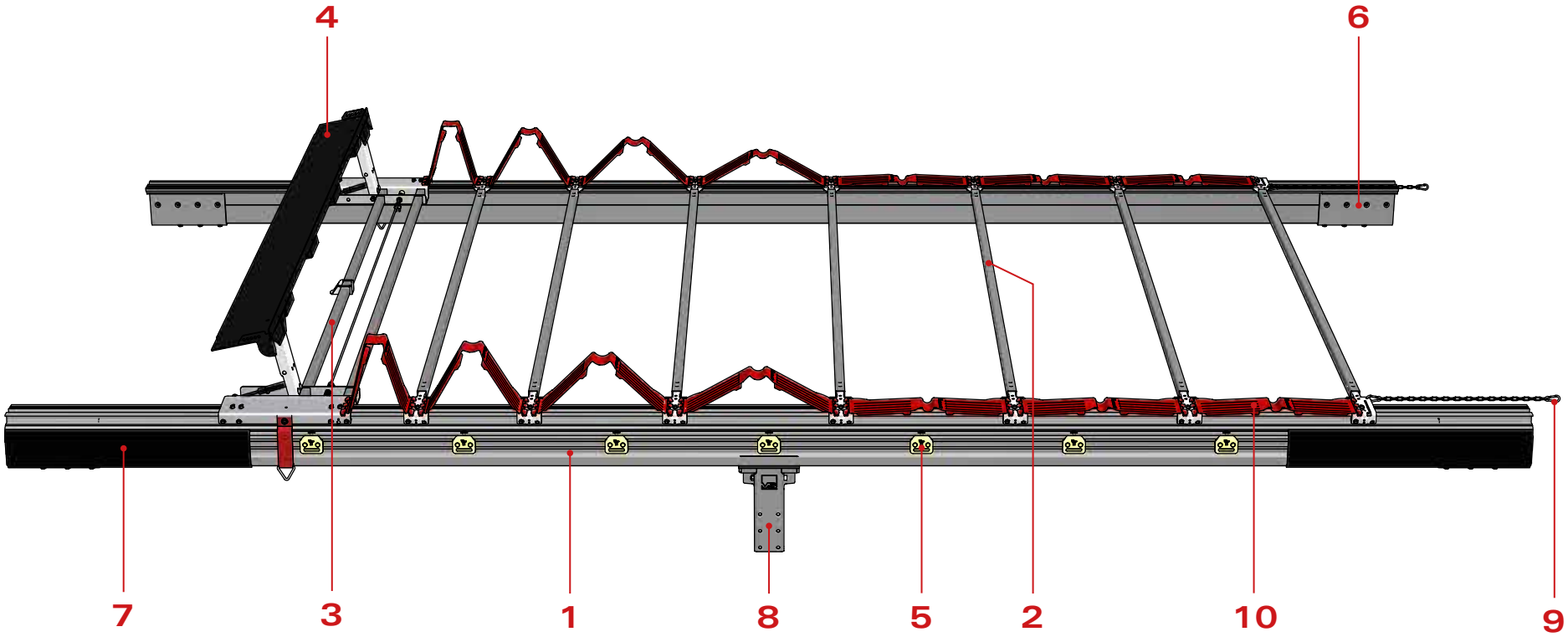

1	Alto Trike rail	7	PVC pelmet
2	Roof stick	8	Pillar bracket
3	Collapsible backside	9	Set accessories
4	Back beam	10	Folding plate
5	Trike roller	11*	Carapax plate
6	Set mounting plates	12*	Pull bar

* Not visible on the composition drawing above

1 Alto Trike rail

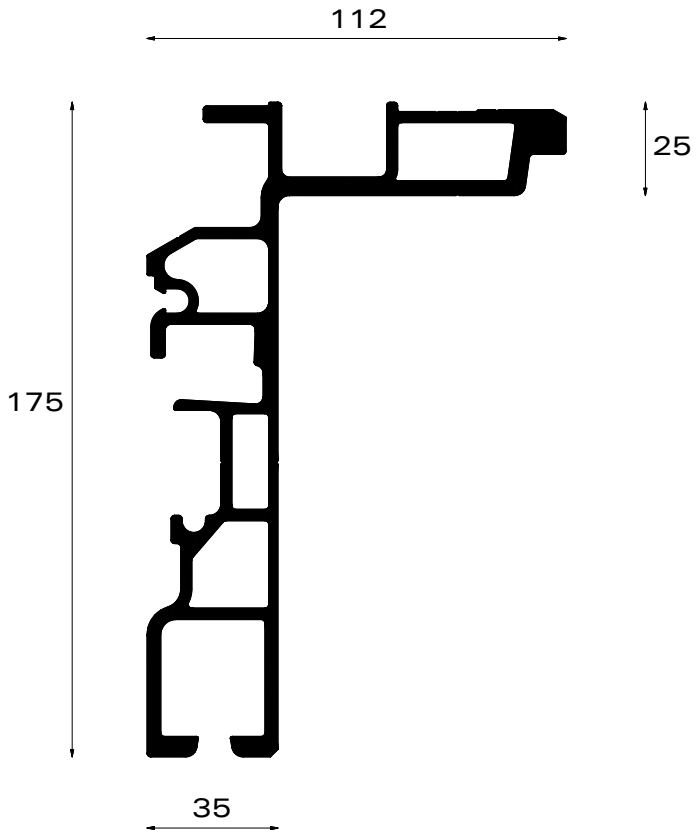

	PART NR.
* L = 10,2m	162-36102
* L = 13,6m	162-36136

*profile with pre-bending

Ix : 711cm^4
Iy : 213cm^4
± 6,1 kg/m

2a Roof stick for sliding roof

	PART NR.
SB=2550 - Type SP	224-01001
SB=2550 - Type AS (Al)	224-03001

2b Roof stick with anti-fly hook for sliding roof

	PART NR.
SB=2550 - Type SP	224-91001
SB=2550 - Type AS (Al)	224-93001

2c Roof stick for fixed roof with tarpaulin cover

	PART NR.
SB=2550 - Type SP	224-41201
SB=2550 - Type AS (Al)	224-43201

* Roof stick riveted to rail with monobolts

3a Collapsible backside

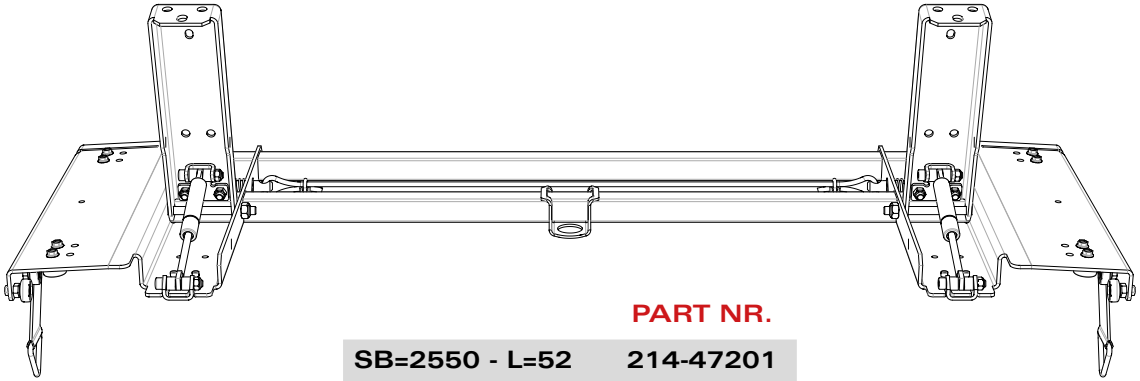

	PART NR.
SB=2550 - L=52	214-47201

9a Set accessories

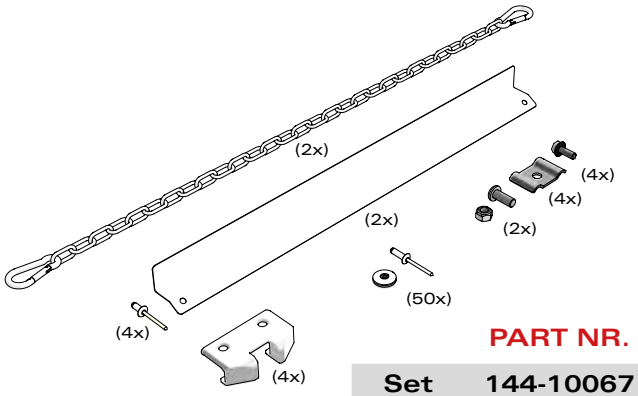

	PART NR.
Set	144-10067

3b Collapsible backside for fixed roof with tarpaulin cover

	PART NR.
SB=2550 - L=100	324-47001

9b Set accessories Twin

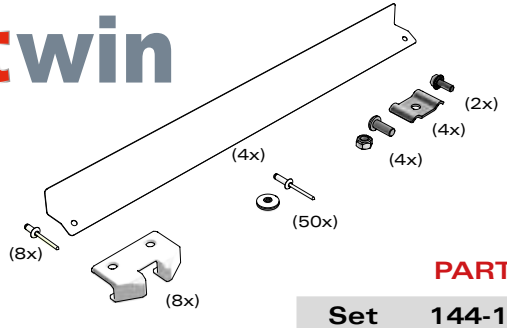

	PART NR.
Set	144-10082

* Alto Trike Twin sliding roof: this set replaces the basic accessories set (144-10067)!

Front header

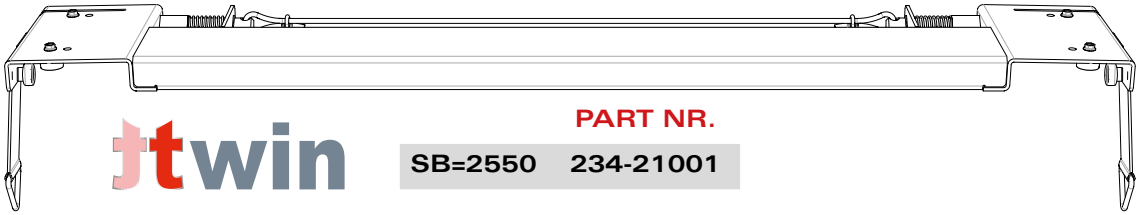

	PART NR.
SB=2550	234-21001

9c Set lock collapsible backside

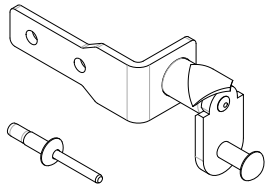

	PART NR.
Set	144-10086

9d Set accessories external unlocking

	PART NR.
Set	144-10174

4a Back beam

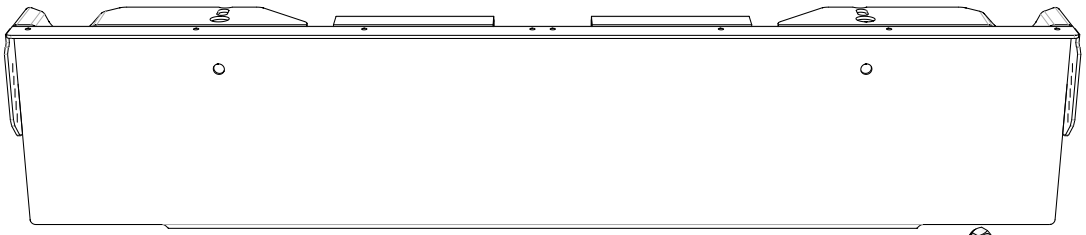

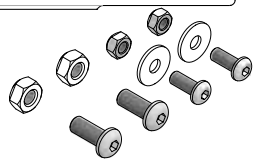

	PART NR.
SB=2550 - 208Z	193-18001
Mounting set	144-10022

4b Back beam

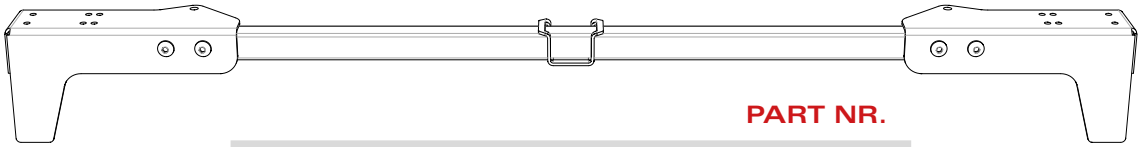

	PART NR.
Set back beam tube 30x30mm	144-10037
Tube 30x30x2mm	112-07001

Rain strip for back beam (4a)

	PART NR.
SB=2550	192-01601

Rain strip for front header

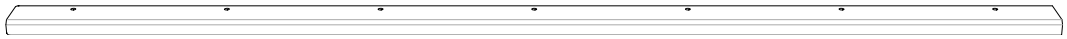

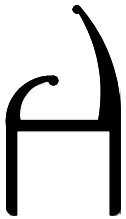

ttwin

	PART NR.
Rain strip SB=2550	192-01606
PVC pelmet L = 2,6m (black)	242-20001
Mounting strip 30x5mm L= 2,6m	292-07001

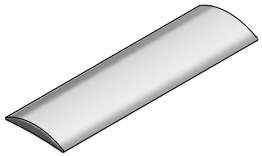

10 Folding plate

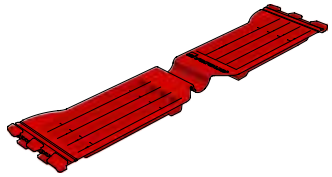

	PART NR.
Type 400	242-01004
Type 500	242-01005
Type 600	242-01006
Type 700	242-01007
Type 570	242-01057
Type 650	242-01065

7 PVC pelmet (black)

	PART NR.
L = 9m	242-14109
L = 14m	242-14114

12 Pull bars & webbing

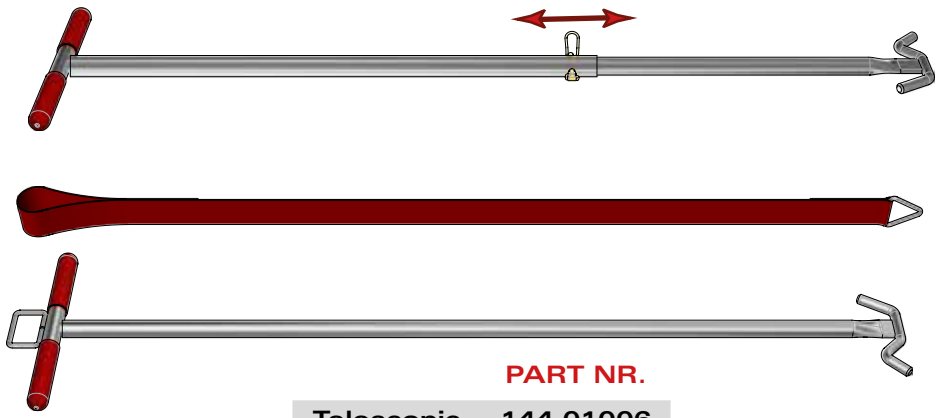

	PART NR.
Telescopic	144-01006
Webbing	144-01500
Standard	144-01003

8 Pillar bracket

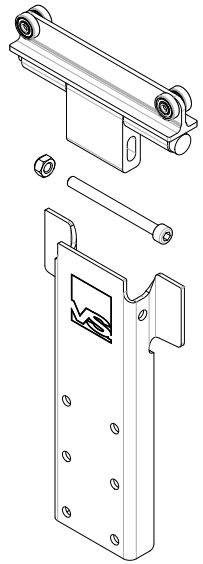

	PART NR.
Bracket	264-01001
Bolt & nut	144-10015
Plate	262-05006

6 Set mounting plates

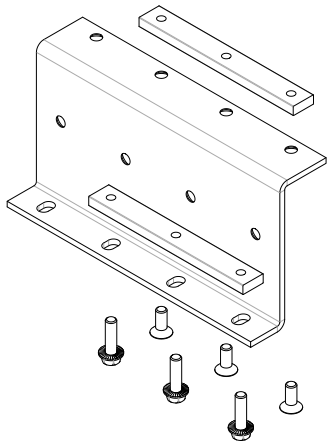

PART NR.

154-03012

* contains 4x the parts of the picture

5 Trike roller

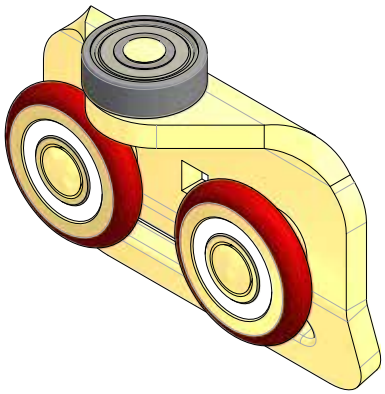

PART NR.

284-10024

11 Carapax plate

PART NR.

291-03004

* only needed for roof with Carapax cover

Spare Parts

omega alto trike

For roof sticks

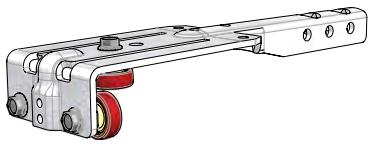

Assembled bracket

PART NR.

174-02001

Roller bearing plastic

PART NR.

132-01001

Bolt tensilock M6x16mm

PART NR.

091-23001

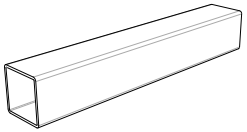

Tube30x30x1,5mm

	PART NR.
L = 2185mm	112-01003

For collapsible backside

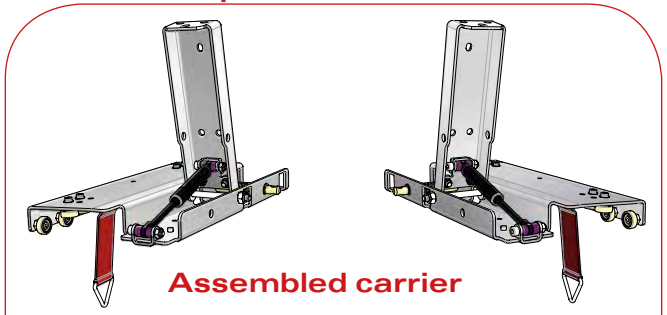

Assembled carrier

	PART NR.
Left	204-47201
Right	204-47202

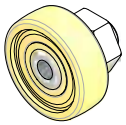

Roller bearing steel

PART NR.

132-03001

Bolt tensilock M6x16mm

PART NR.

091-23001

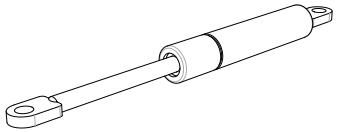

Gas spring 700N

PART NR.

302-01001

For accessories set

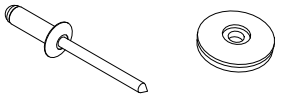

Rivet & washer

	PART NR.
50 pieces	144-10003

Rope clamp

PART NR.

292-01001

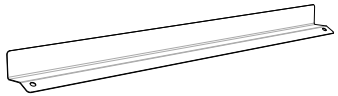

Protection plate

PART NR.

142-06006

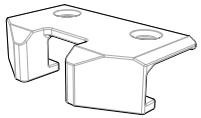

Locking nose

PART NR.

142-05020

Chain with 2 hooks

PART NR.

142-07001

For mounting set

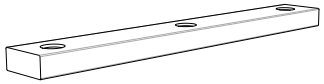

Mounting block

PART NR.

152-02001

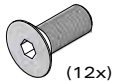

(12x)

Bolt M10x25mm

PART NR.

091-26002

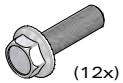

(12x)

Bolt tensilock M10x35mm

PART NR.

091-23002

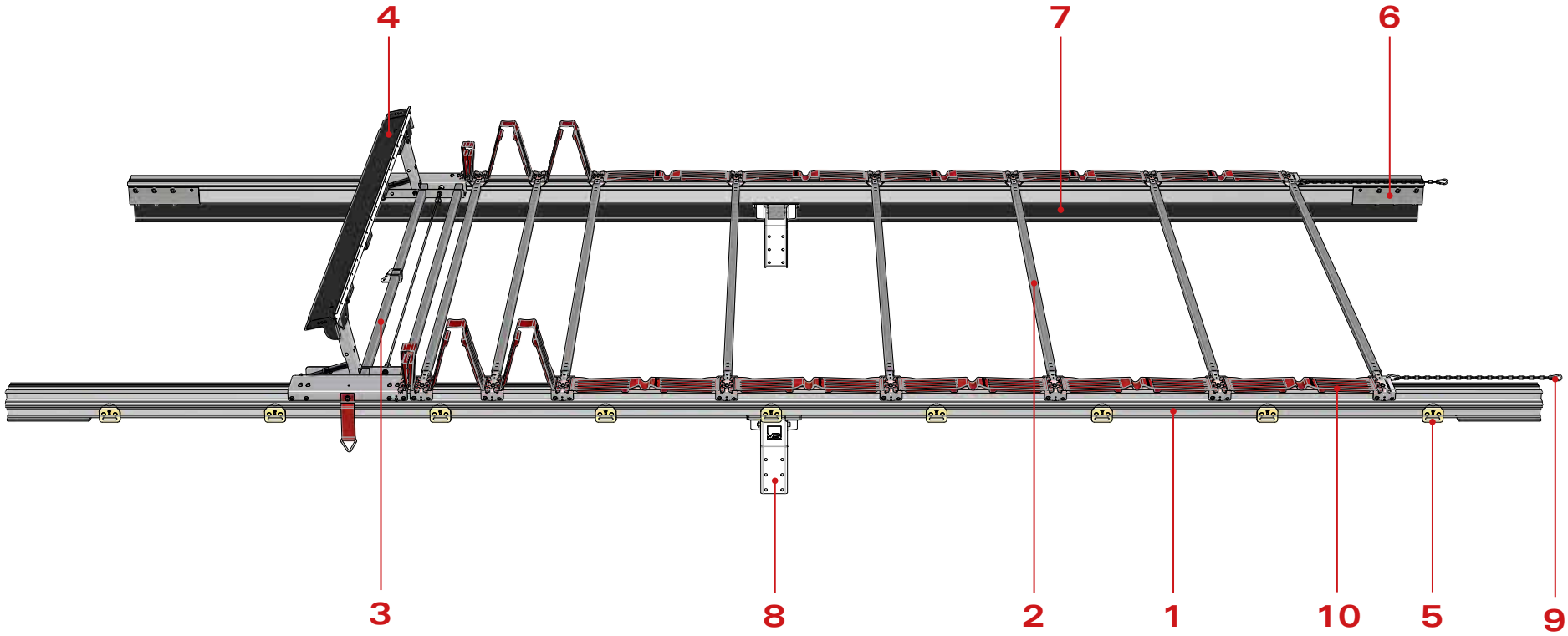

1	Alto Trike Light rail	7	PVC pelmet
2	Roof stick	8	Pillar bracket
3	Collapsible backside	9	Set accessories
4	Back beam	10	Folding plate
5	Trike roller	11	Carapax plate
6	Set mounting plates	12	Pull bar

1 Alto Trike Light rail

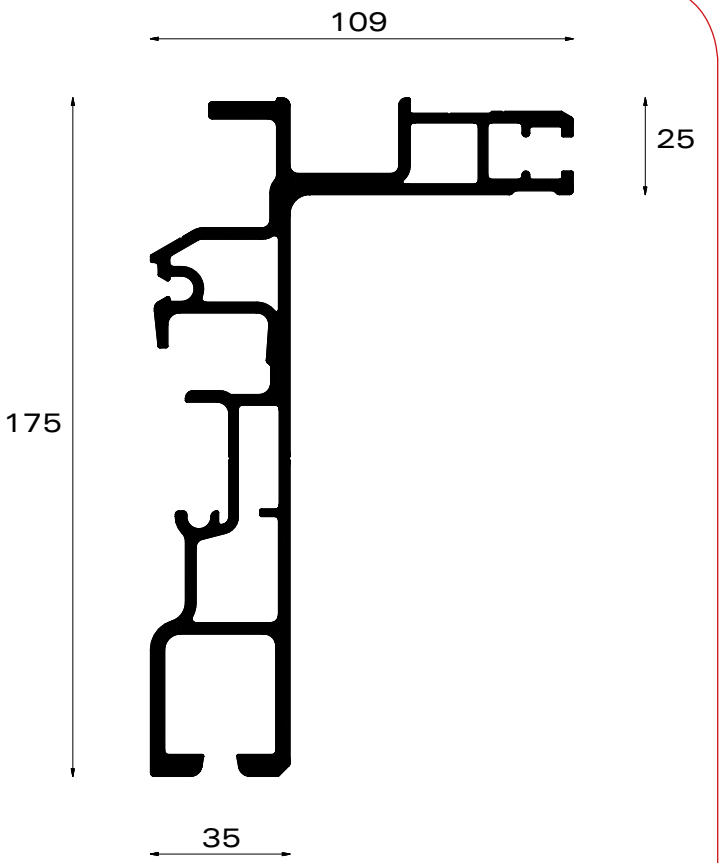

	PART NR.
L = 7,8m	162-22780
L = 8,5m	162-22850

Ix : 681cm^4
Iy : 162cm^4
± 5,8 kg/m

2a Roof stick for sliding roof

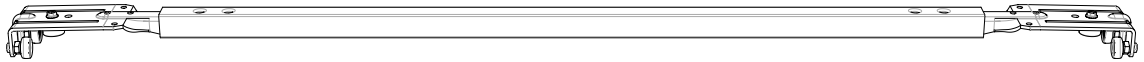

	PART NR.
SB=2550 - Type SP	224-01001
SB=2550 - Type AS (Al)	224-03001

2b Roof stick for fixed roof with polyester cover

fix

	PART NR.
SB=2550 - Type SP	224-41101
SB=2550 - Type AS (Al)	224-43101
Mounting set roof stick fix	144-10048

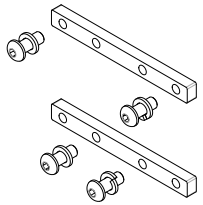

* Roof stick screwed to rail with bolts

* 1 set/roof stick

2c Roof stick for fixed roof with tarpaulin cover

fix

	PART NR.
SB=2550 - Type SP	224-41211
SB=2550 - Type AS (Al)	224-43211
Mounting set roof stick fix	144-10048

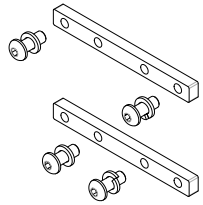

*Roof stick screwed to rail with bolts

* 1 set/roof stick

3a Collapsible backside

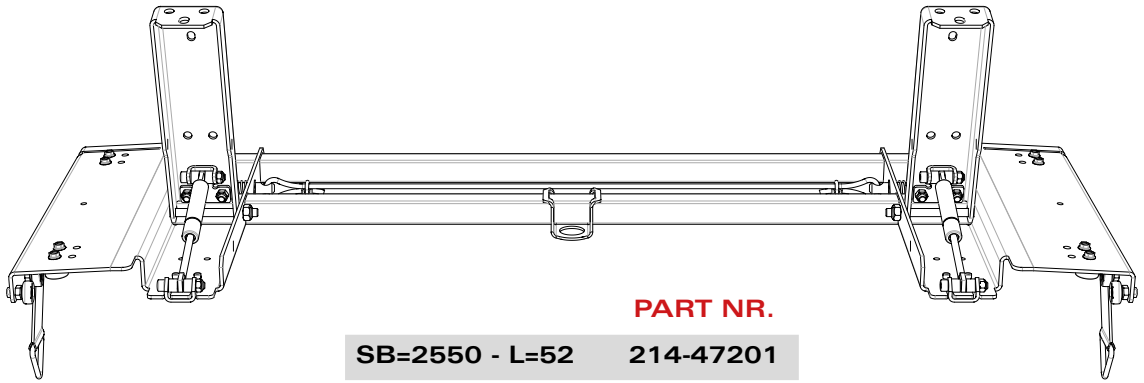

	PART NR.
SB=2550 - L=52	214-47201

9a Set accessories

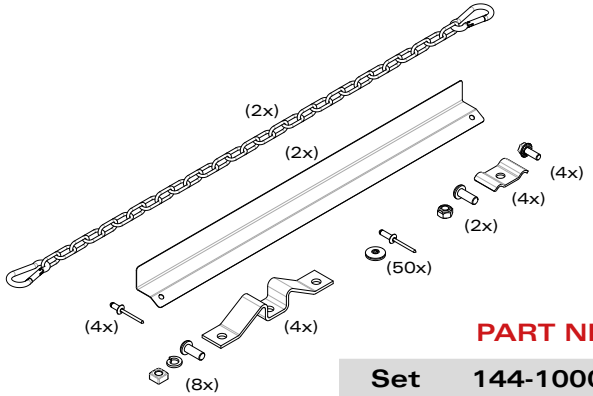

	PART NR.
Set	144-10001

3b Collapsible backside for fixed roof with tarpaulin cover

	PART NR.
SB=2550 - L=100	324-47201

9b Set accessories Twin

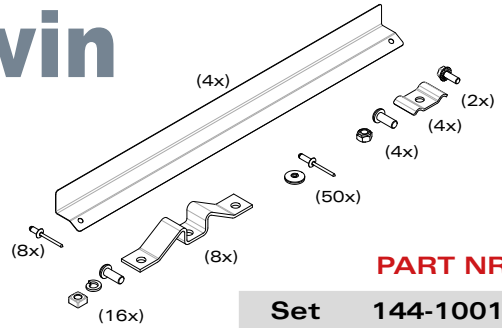

	PART NR.
Set	144-10018

* Alto Trike Light Twin sliding roof: this set replaces the basic set accessories (144-10001)!

Front header

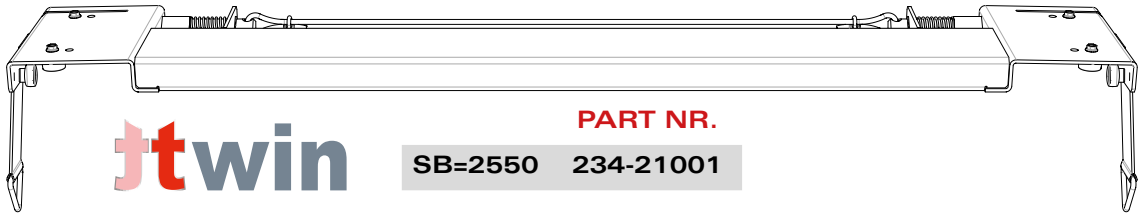

	PART NR.
SB=2550	234-21001

9c Set lock collapsible backside

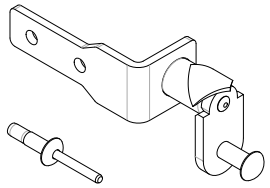

	PART NR.
Set	144-10086

9d Set accessories external unlocking

	PART NR.
Set	144-10174

4a Back beam

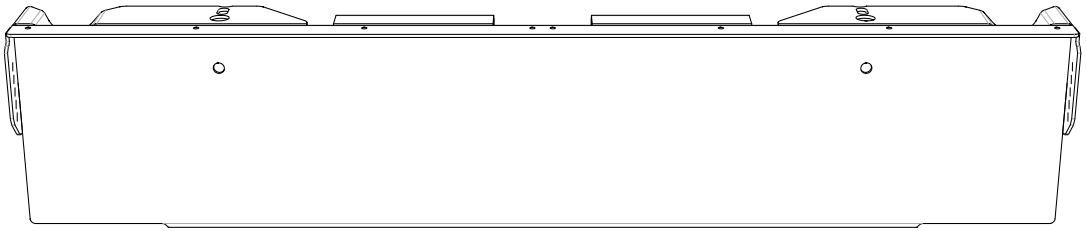

	PART NR.
SB=2550 - 208Z	193-18001
Mounting set	144-10022

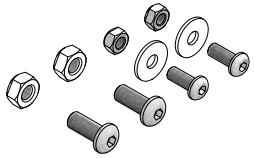

4b Back beam

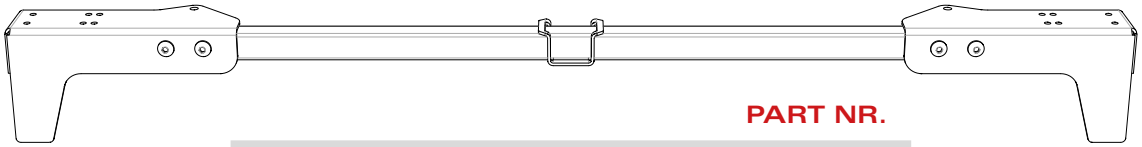

	PART NR.
Set back beam tube 30x30mm	144-10037
Tube 30x30x2mm	112-07001

Rain strip for back beam (4a)

	PART NR.
SB=2550	192-01601

Rain strip for front header

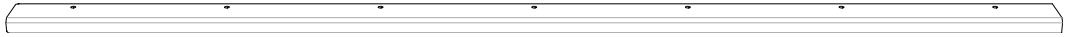

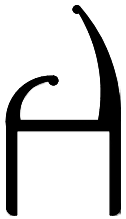

ttwin

	PART NR.
Rain strip SB=2550	192-01606
PVC pelmet L = 2,6m (black)	242-20001
Mounting strip 30x5mm L= 2,6m	292-07001

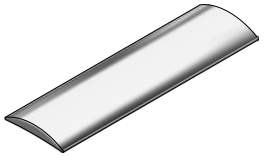

10 Folding plate

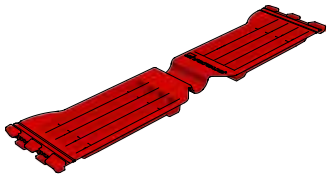

	PART NR.
Type 400	242-01004
Type 500	242-01005
Type 600	242-01006
Type 700	242-01007
Type 570	242-01057
Type 650	242-01065

7 PVC pelmet (black)

	PART NR.
L = 9m	242-14109
L = 14m	242-14114

12 Pull bars & webbing

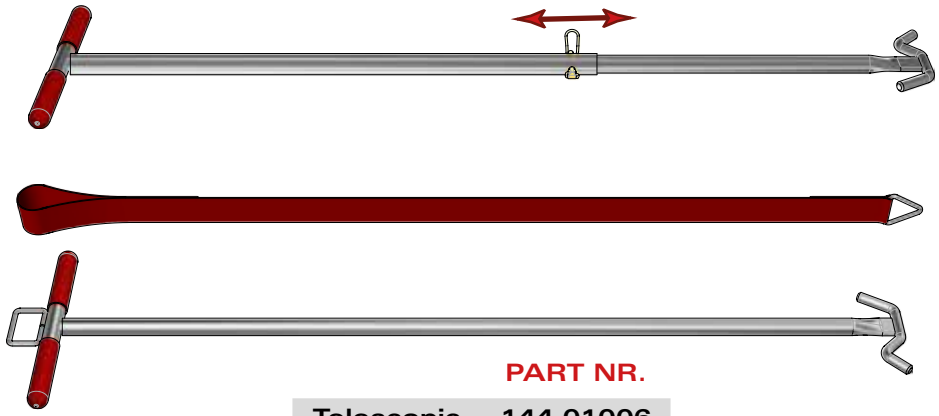

	PART NR.
Telescopic	144-01006
Webbing	144-01500
Standard	144-01003

8 Pillar bracket

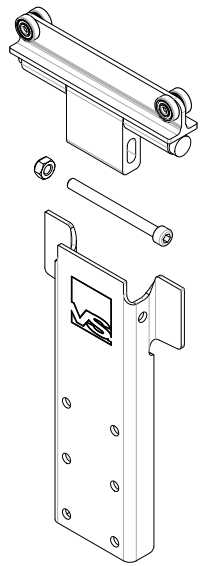

	PART NR.
Bracket	264-01001
Bolt & nut	144-10015
Plate	262-05006

6 Set mounting plates

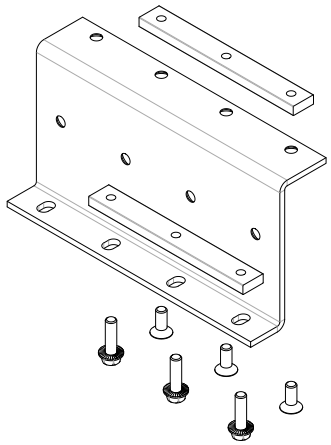

PART NR.

154-03012

* contains 4x the parts of the picture

5 Trike roller

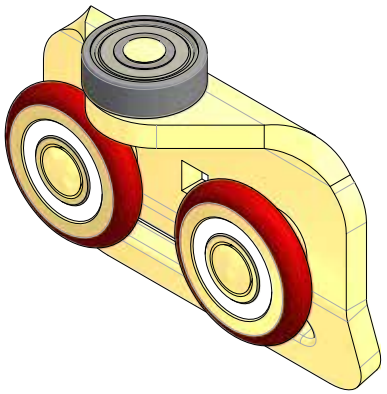

PART NR.

284-10024

11 Carapax plate

PART NR.

291-03004

* only needed for roof with Carapax cover

Spare Parts

omega
alto trike light

For roof sticks

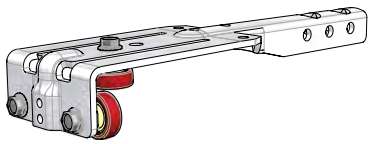

Assembled bracket

PART NR.

174-02001

Roller bearing plastic

PART NR.

132-01001

Bolt tensilock M6x16mm

PART NR.

091-23001

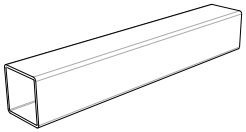

Tube30x30x1,5mm

	PART NR.
L = 2185mm	112-01003

For collapsible backside

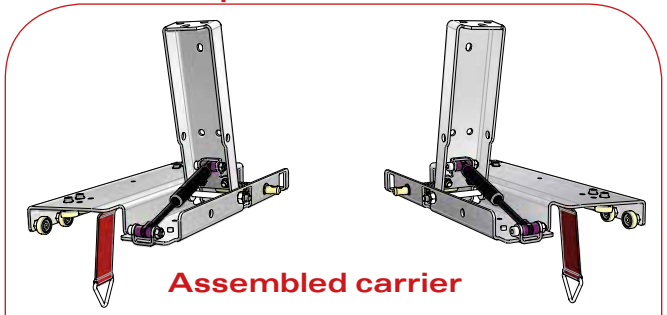

Assembled carrier

	PART NR.
Left	204-47201
Right	204-47202

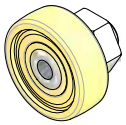

Roller bearing steel

PART NR.

132-03001

Bolt tensilock M6x16mm

PART NR.

091-23001

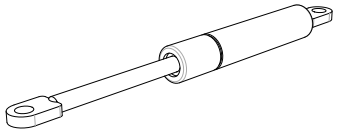

Gas spring 700N

PART NR.

302-01001

For accessories set

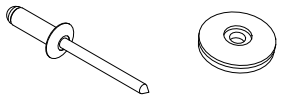

Rivet & washer

	PART NR.
50 pieces	144-10003

Rope clamp

PART NR.

292-01001

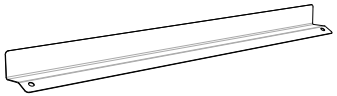

Protection plate

PART NR.

142-06006

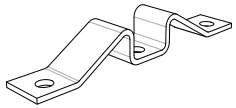

Locking nose

PART NR.

142-05002

Chain with 2 hooks

PART NR.

142-07001

For mounting set

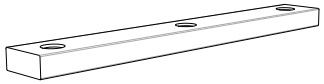

Mounting block

PART NR.

152-02001

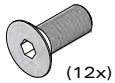

(12x)

Bolt M10x25mm

PART NR.

091-26002

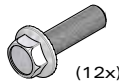

(12x)

Bolt tensilock M10x35mm

PART NR.

091-23002

omega
duo trike

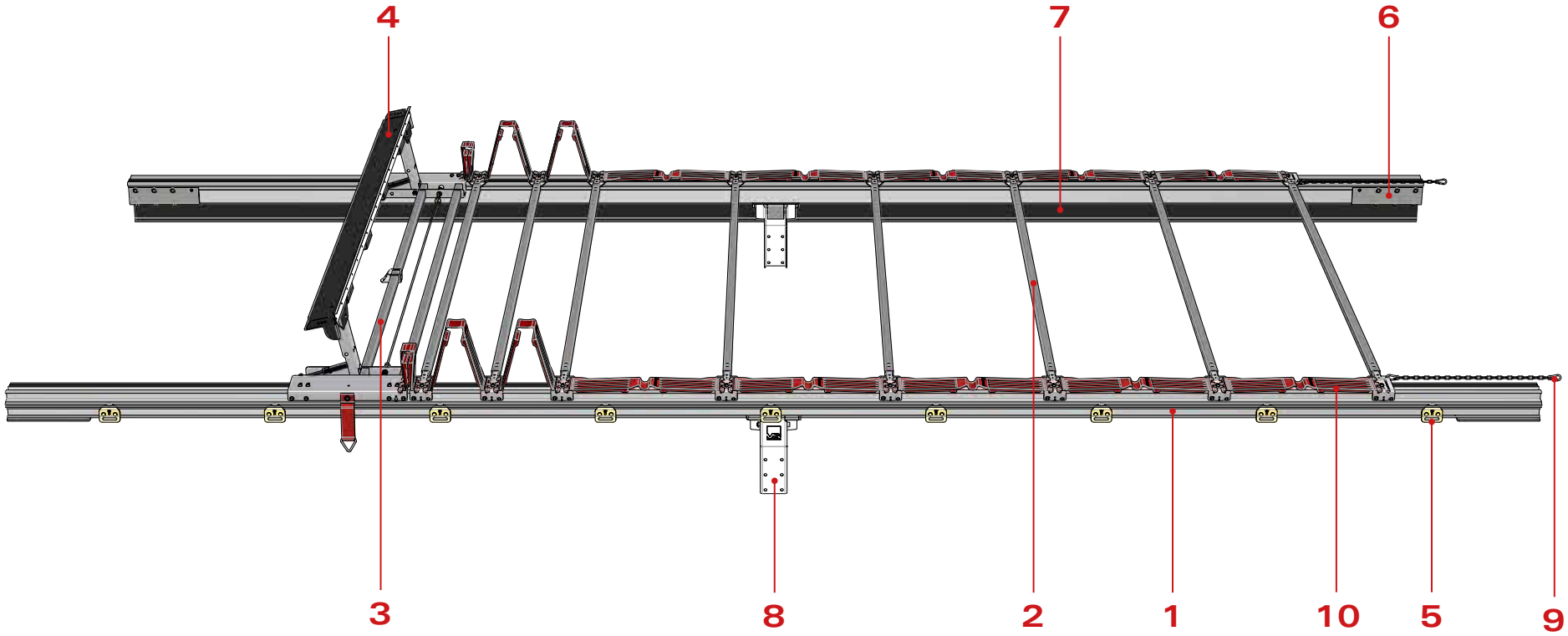

1	Duo Trike rail	7	PVC pelmet
2	Roof stick	8	Pillar bracket
3	Collapsible backside	9	Set accessories
4	Back beam	10	Folding plate
5	Trike roller	11	Carapax plate
6	Set mounting plates	12	Pull bar

1 Duo Trike rail

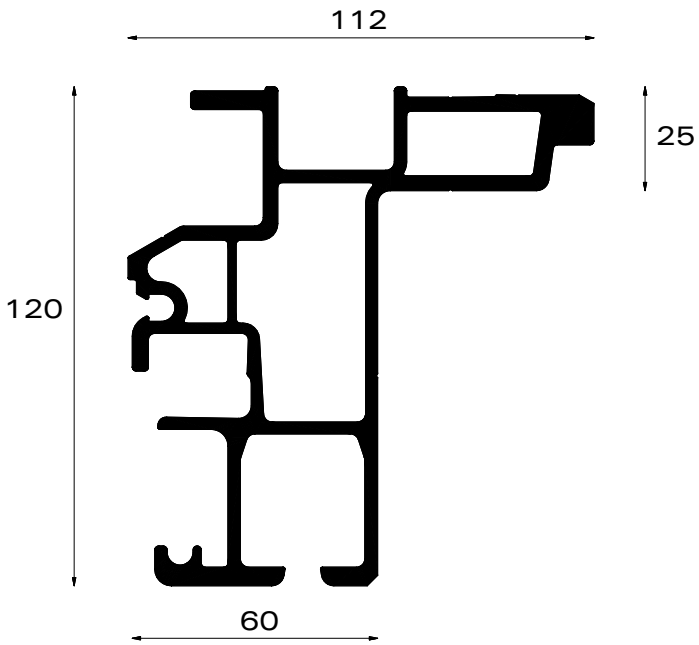

	PART NR.
* L = 10,2m	162-35102
* L = 13,6m	162-35136

*profile with pre-bending

Ix : 291cm⁴
Iy : 175cm⁴
± 5,3 kg/m

2a Roof stick for sliding roof

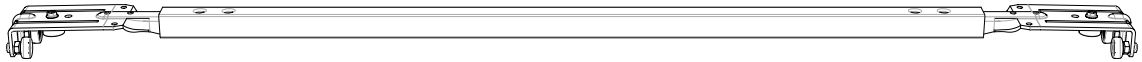

	PART NR.
SB=2550 - Type SP	224-01001
SB=2550 - Type AS (Al)	224-03001

2b Roof stick with anti-fly hook for sliding roof

	PART NR.
SB=2550 - Type SP	224-91001
SB=2550 - Type AS (Al)	224-93001

2c Roof stick for fixed roof with tarpaulin cover

	PART NR.
SB=2550 - Type SP	224-41201
SB=2550 - Type AS (Al)	224-43201

* Roof stick riveted to rail with monobolts

3a Collapsible backside

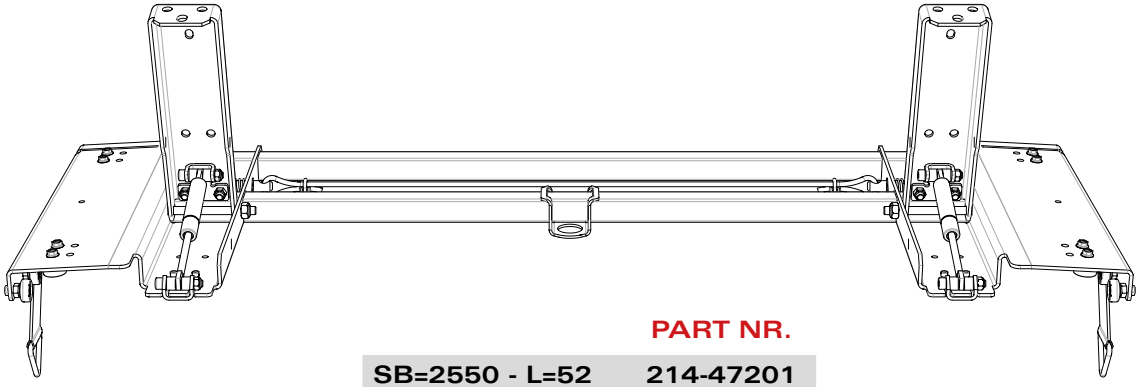

	PART NR.
SB=2550 - L=52	214-47201

9a Set accessories

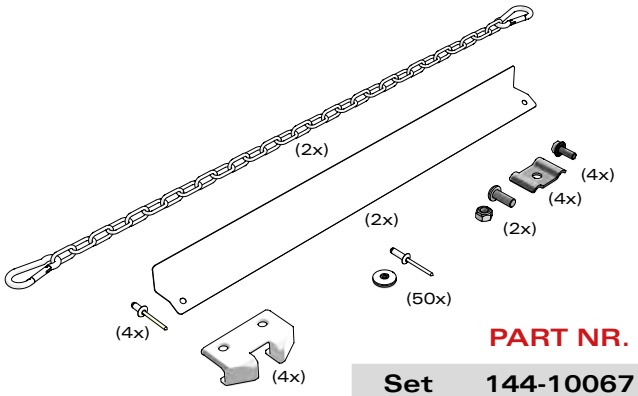

	PART NR.
Set	144-10067

3b Collapsible backside for fixed roof with tarpaulin cover

	PART NR.
SB=2550 - L=100	324-47001

9b Set accessories Twin

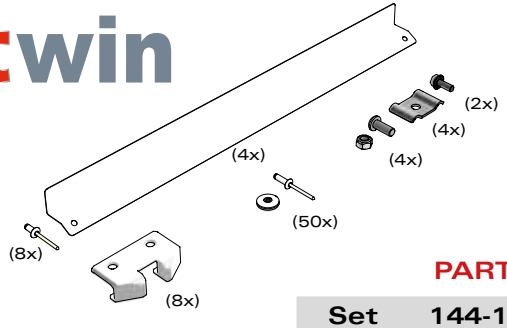

	PART NR.
Set	144-10082

* Duo Trike Twin sliding roof: this set replaces the basic set accessories (144-10067)!

Front header

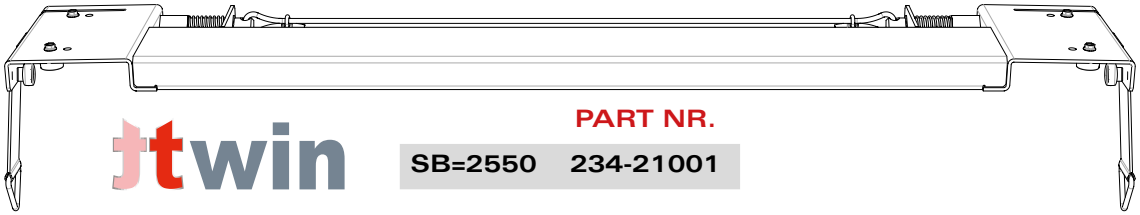

	PART NR.
SB=2550	234-21001

9c Set lock collapsible backside

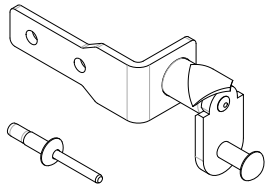

	PART NR.
Set	144-10086

9d Set accessories external unlocking

	PART NR.
Set	144-10174

4a Back beam

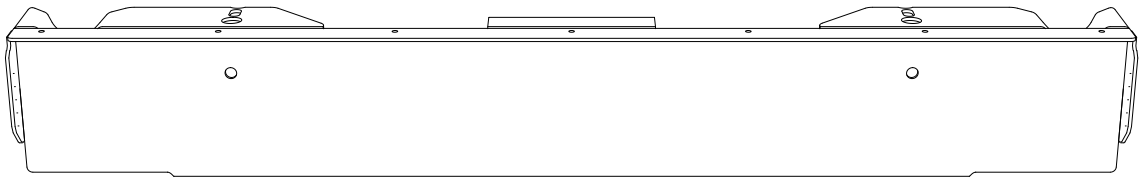

	PART NR.
SB=2550 - 145Z	193-14001
Mounting set	144-10022

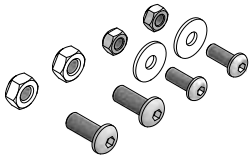

4b Back beam

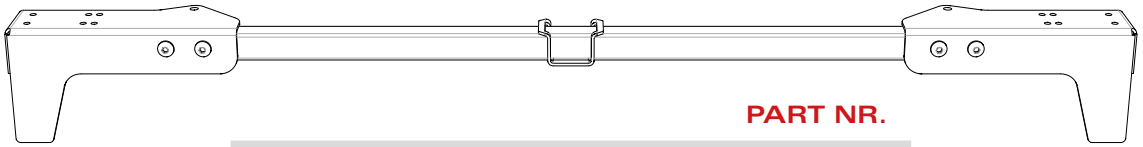

	PART NR.
Set back beam tube 30x30mm	144-10037
Tube 30x30x2mm	112-07001

Rain strip for back beam (4a)

	PART NR.
SB=2550	192-01601

Rain strip for front header

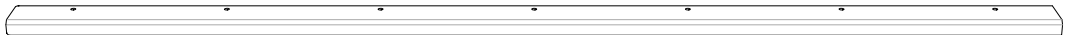

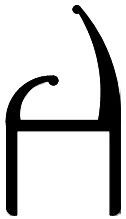

ttwin

	PART NR.
Rain strip SB=2550	192-01606
PVC pelmet L = 2,6m (black)	242-20001
Mounting strip 30x5mm L= 2,6m	292-07001

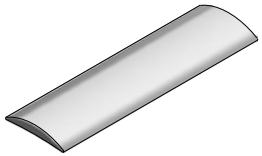

10 Folding plate

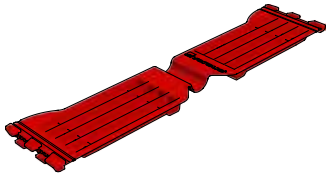

	PART NR.
Type 400	242-01004
Type 500	242-01005
Type 600	242-01006
Type 700	242-01007
Type 570	242-01057
Type 650	242-01065

7 PVC pelmet (black)

	PART NR.
L = 9m	242-14109
L = 14m	242-14114

12 Pull bars & webbing

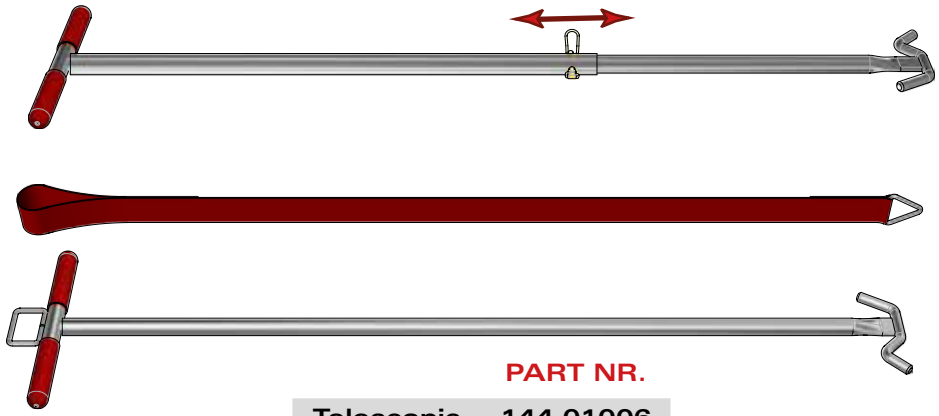

	PART NR.
Telescopic	144-01006
Webbing	144-01500
Standard	144-01003

8 Pillar bracket

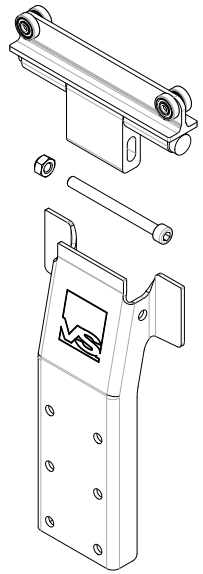

	PART NR.
Bracket	264-01001
Bolt & nut	144-10015
Plate	262-05007

6 Set mounting plates

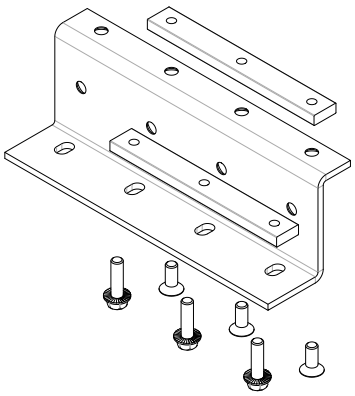

PART NR.

154-03013

* contains 4x the parts of the picture

5 Trike roller

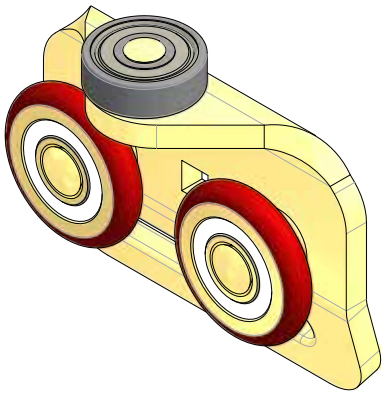

PART NR.

284-10024

11 Carapax plate

PART NR.

291-03004

* only needed for roof with Carapax cover

Spare Parts

omega duo trike

For roof sticks

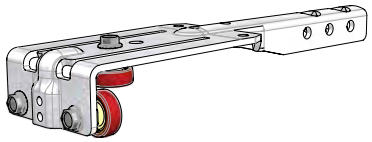

Assembled bracket

PART NR.

174-02001

Roller bearing plastic

PART NR.

132-01001

Bolt tensilock M6x16mm

PART NR.

091-23001

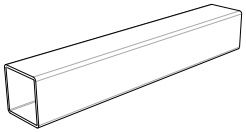

Tube30x30x1,5mm

	PART NR.
L = 2185mm	112-01003

For collapsible backside

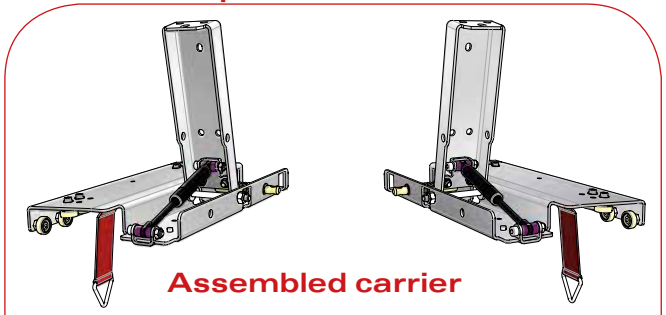

Assembled carrier

	PART NR.
Left	204-47201
Right	204-47202

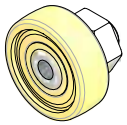

Roller bearing steel

PART NR.

132-03001

Bolt tensilock M6x16mm

PART NR.

091-23001

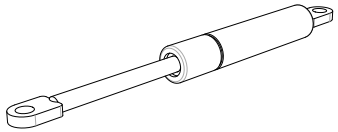

Gas spring 700N

PART NR.

302-01001

For accessories set

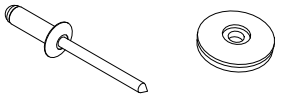

Rivet & washer

	PART NR.
50 pieces	144-10003

Rope clamp

PART NR.

292-01001

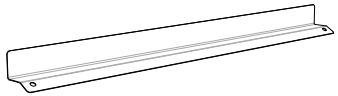

Protection plate

PART NR.

142-06006

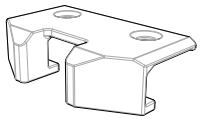

Locking nose

PART NR.

142-05020

Chain with 2 hooks

PART NR.

142-07001

For mounting set

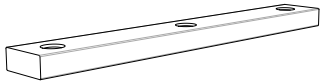

Mounting block

PART NR.

152-02001

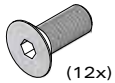

(12x)

Bolt M10x25mm

PART NR.

091-26002

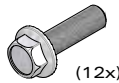

(12x)

Bolt tensilock M10x35mm

PART NR.

091-23002

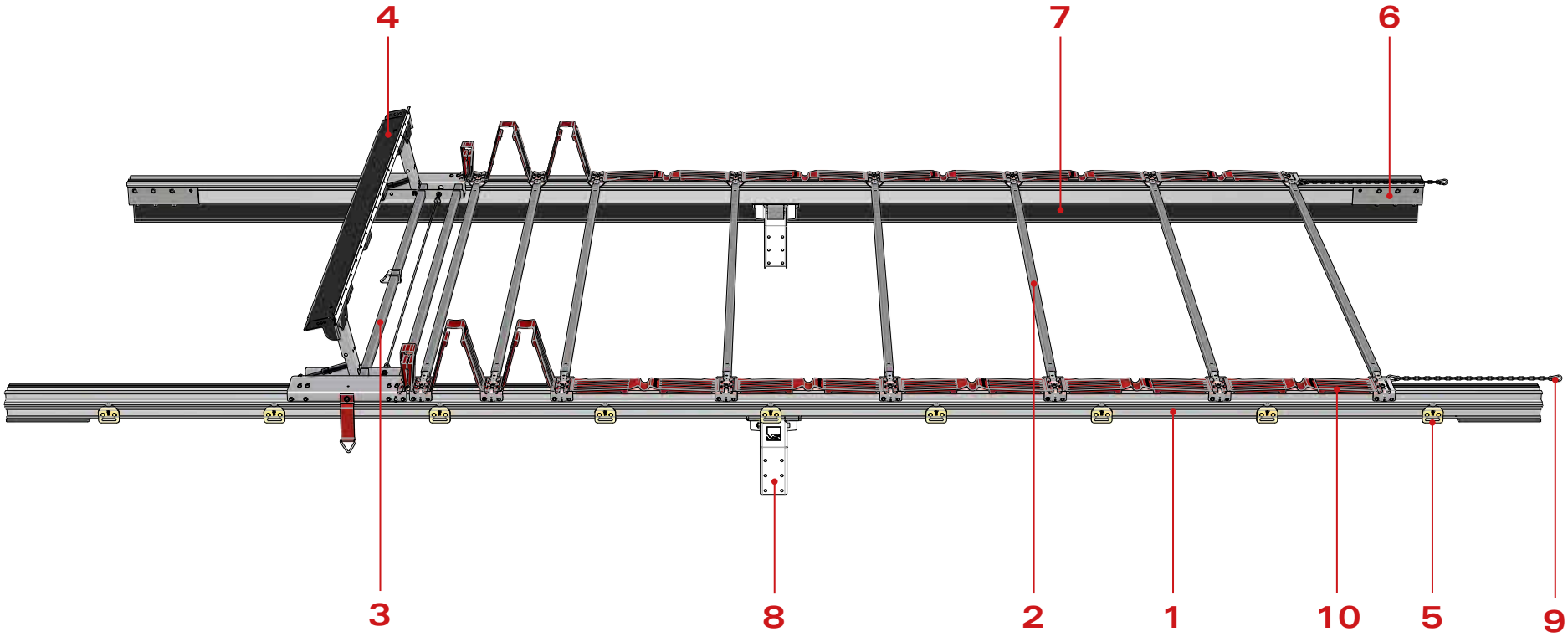

1	Duo Trike Light rail	7	PVC pelmet
2	Roof stick	8	Pillar bracket
3	Collapsible backside	9	Set accessories
4	Back beam	10	Folding plate
5	Trike roller	11	Carapax plate
6	Set mounting plates	12	Pull bar

1 Duo Trike Light rail

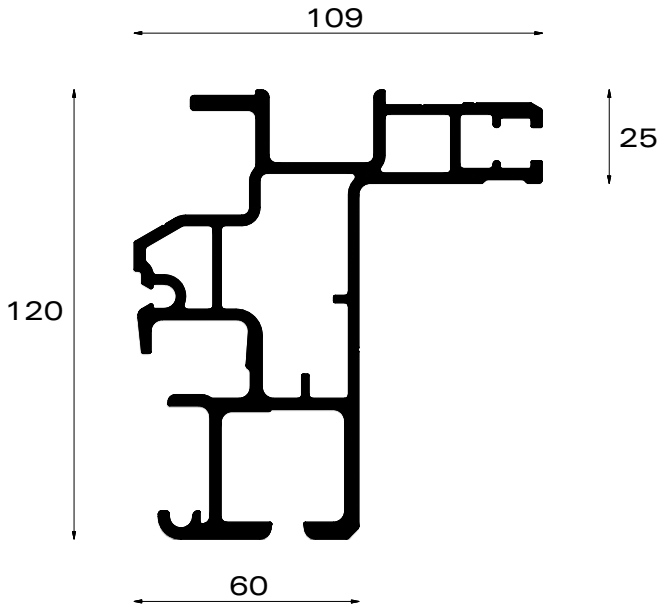

	PART NR.
L = 7,8m	162-23780
L = 8,5m	162-23850

Ix : 262cm^4
Iy : 139cm^4
± 4,9 kg/m

2a Roof stick for sliding roof

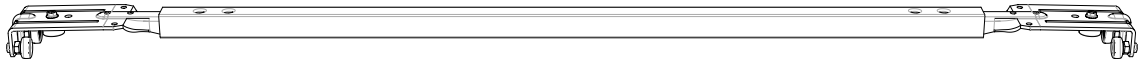

	PART NR.
SB=2550 - Type SP	224-01001
SB=2550 - Type AS (Al)	224-03001

2b Roof stick for fixed roof with polyester cover

fix

	PART NR.
SB=2550 - Type SP	224-41101
SB=2550 - Type AS (Al)	224-43101
Mounting set roof stick fix	144-10048

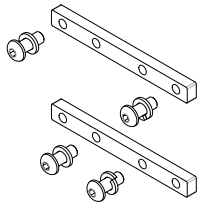

* Roof stick screwed to rail with bolts

* 1 set/roof stick

2c Roof stick for fixed roof with tarpaulin cover

fix

	PART NR.
SB=2550 - Type SP	224-41211
SB=2550 - Type AS (Al)	224-43211
Mounting set roof stick fix	144-10048

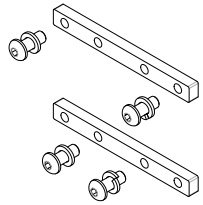

* Roof stick screwed to rail with bolts

* 1 set/roof stick

3a Collapsible backside

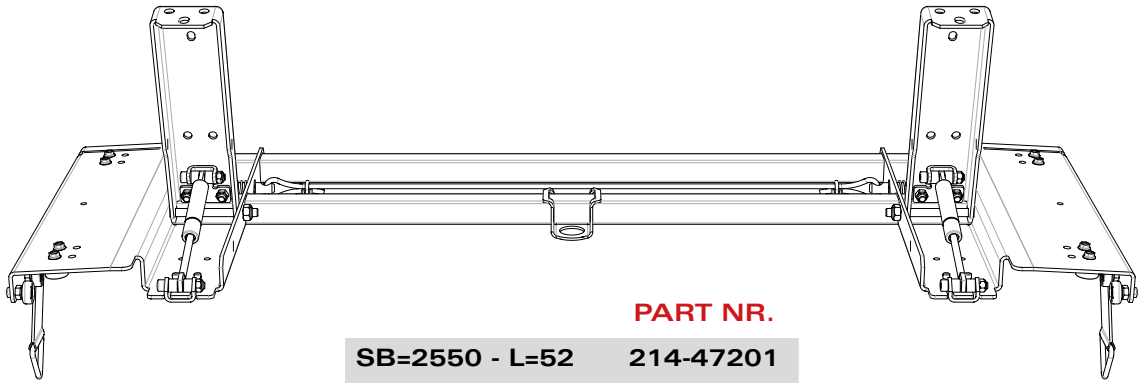

	PART NR.
SB=2550 - L=52	214-47201

9a Set accessories

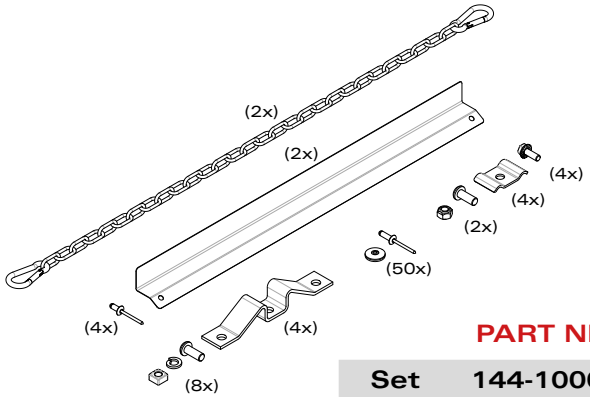

	PART NR.
Set	144-10001

3b Collapsible backside for fixed roof with tarpaulin cover

fix

	PART NR.
SB=2550 - L=100	324-47201

9b Set accessories Twin

ttwin

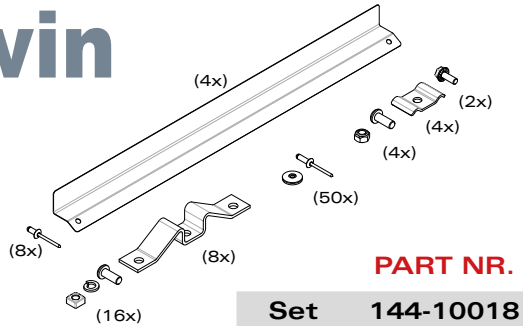

	PART NR.
Set	144-10018

* Duo Trike Light Twin sliding roof: this set replaces the basic set accessories (144-10001)!

Front header

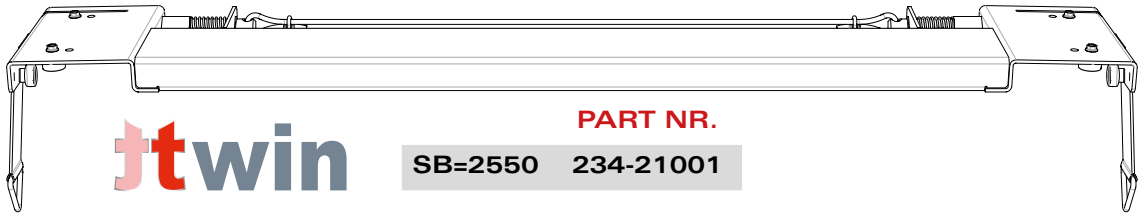

ttwin

	PART NR.
SB=2550	234-21001

9c Set lock collapsible backside

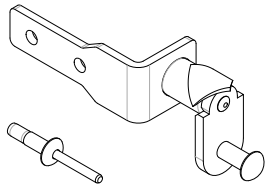

	PART NR.
Set	144-10086

9d Set accessories external unlocking

	PART NR.
Set	144-10174

4a Back beam

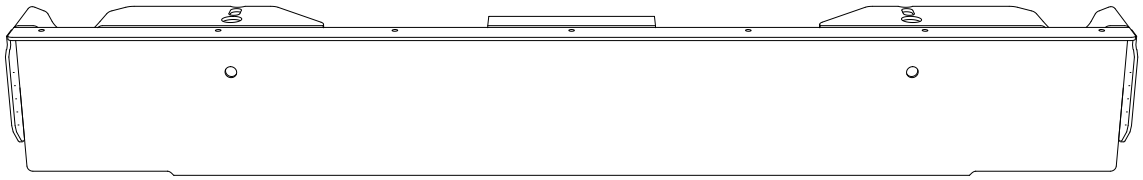

	PART NR.
SB=2550 - 145Z	193-14001
Mounting set	144-10022

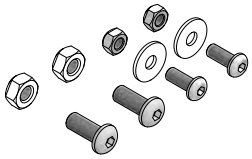

4b Back beam

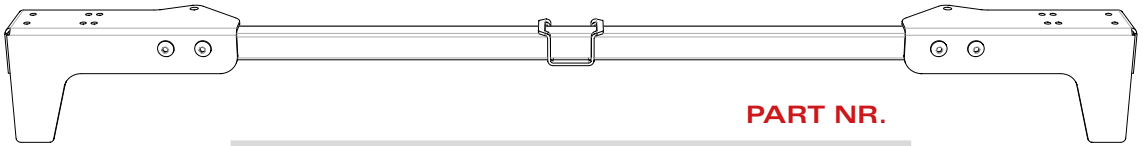

	PART NR.
Set back beam tube 30x30mm	144-10037
Tube 30x30x2mm	112-07001

Rain strip for back beam (4a)

	PART NR.
SB=2550	192-01601

Rain strip for front header

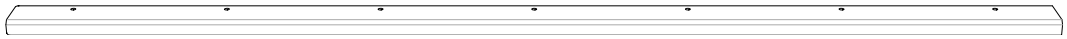

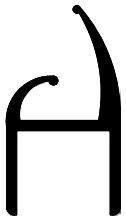

ttwin

	PART NR.
Rain strip SB=2550	192-01606
PVC pelmet L = 2,6m (black)	242-20001
Mounting strip 30x5mm L= 2,6m	292-07001

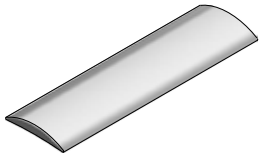

10 Folding plate

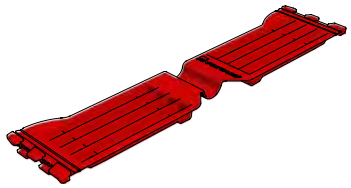

	PART NR.
Type 400	242-01004
Type 500	242-01005
Type 600	242-01006
Type 700	242-01007
Type 570	242-01057
Type 650	242-01065

7 PVC pelmet (black)

	PART NR.
L = 9m	242-14109
L = 14m	242-14114

12 Pull bars & webbing

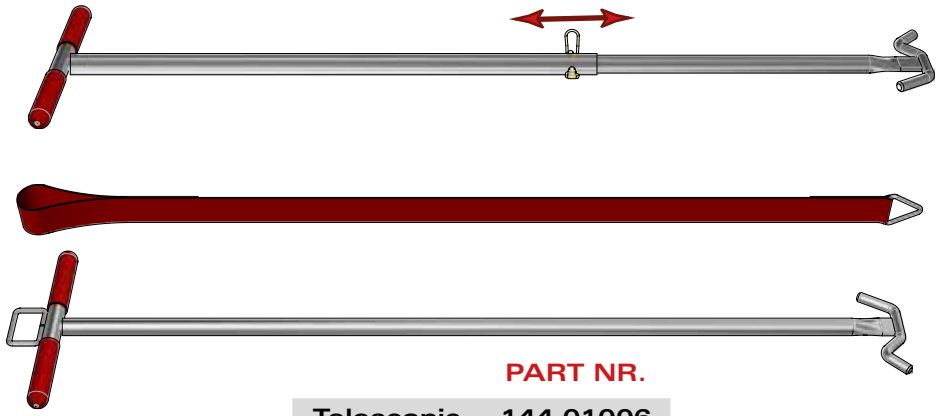

	PART NR.
Telescopic	144-01006
Webbing	144-01500
Standard	144-01003

8 Pillar bracket

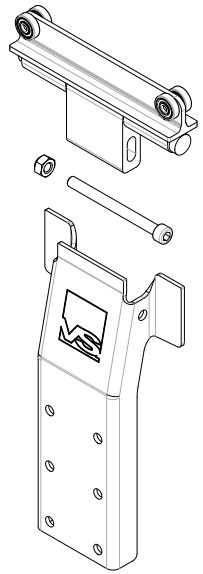

	PART NR.
Bracket	264-01001
Bolt & nut	144-10015
Plate	262-05007

6 Set mounting plates

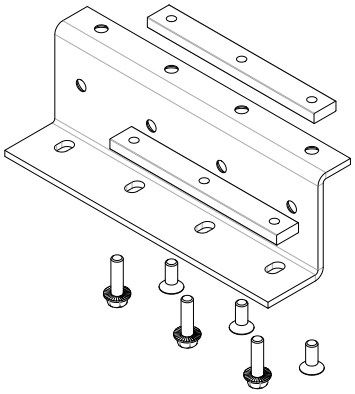

PART NR.

154-03013

* contains 4x the parts of the picture

5 Trike roller

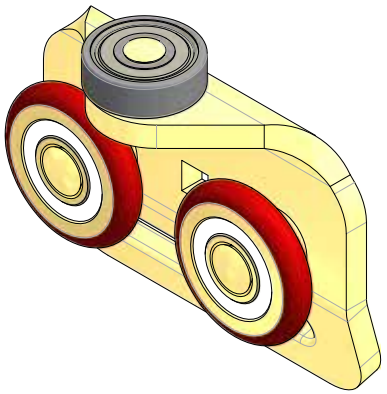

PART NR.

284-10024

11 Carapax plate

PART NR.

291-03004

* only needed for roof with Carapax cover

Spare Parts

omega
duo trike light

For roof sticks

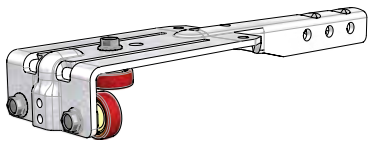

Assembled bracket

PART NR.

174-02001

Roller bearing plastic

PART NR.

132-01001

Bolt tensilock M6x16mm

PART NR.

091-23001

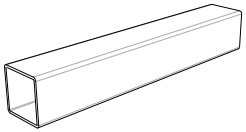

Tube30x30x1,5mm

	PART NR.
L = 2185mm	112-01003

For collapsible backside

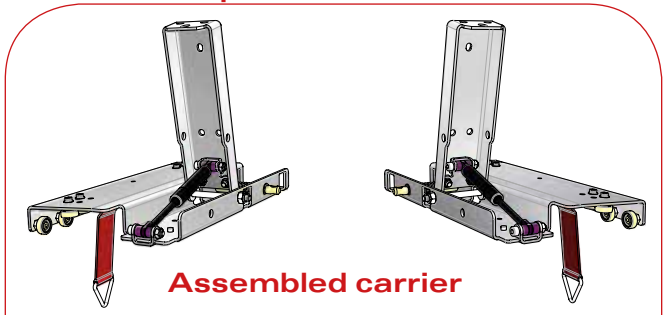

Assembled carrier

	PART NR.
Left	204-47201
Right	204-47202

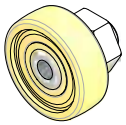

Roller bearing steel

PART NR.

132-03001

Bolt tensilock M6x16mm

PART NR.

091-23001

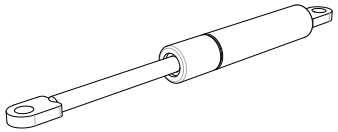

Gas spring 700N

PART NR.

302-01001

For accessories set

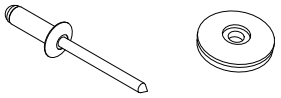

Rivet & washer

	PART NR.
50 pieces	144-10003

Rope clamp

PART NR.

292-01001

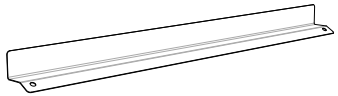

Protection plate

PART NR.

142-06006

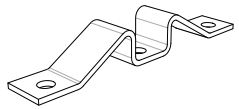

Locking nose

PART NR.

142-05002

Chain with 2 hooks

PART NR.

142-07001

For mounting set

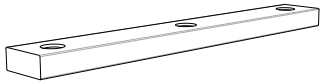

Mounting block

PART NR.

152-02001

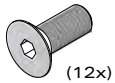

(12x)

Bolt M10x25mm

PART NR.

091-26002

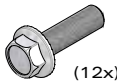

(12x)

Bolt tensilock M10x35mm

PART NR.

091-23002

omega
kubus trike

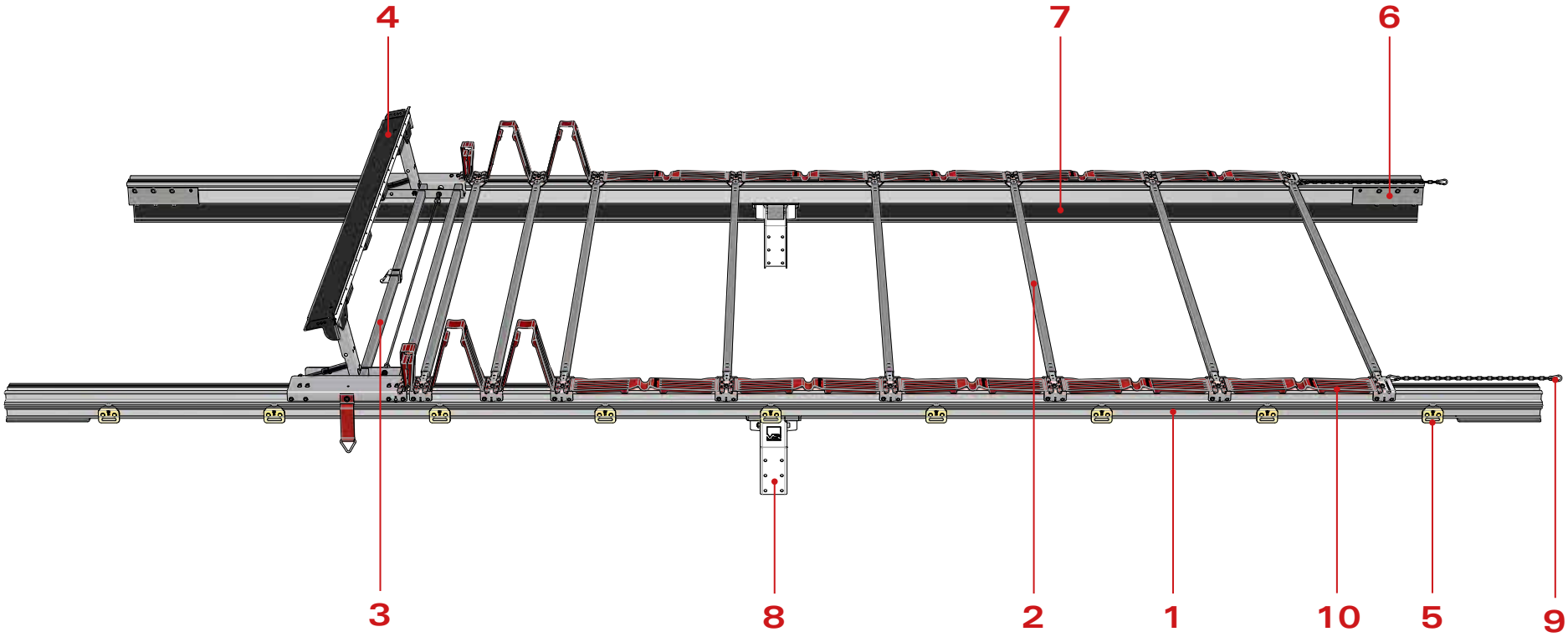

1	Kubus Trike rail	7	PVC pelmet
2	Roof stick	8	Pillar bracket
3	Collapsible backside	9	Set accessories
4	Back beam	10	Folding plate
5	Trike roller	11	Carapax plate
6	Set mounting plates	12	Pull bar

1 Kubus Trike rail

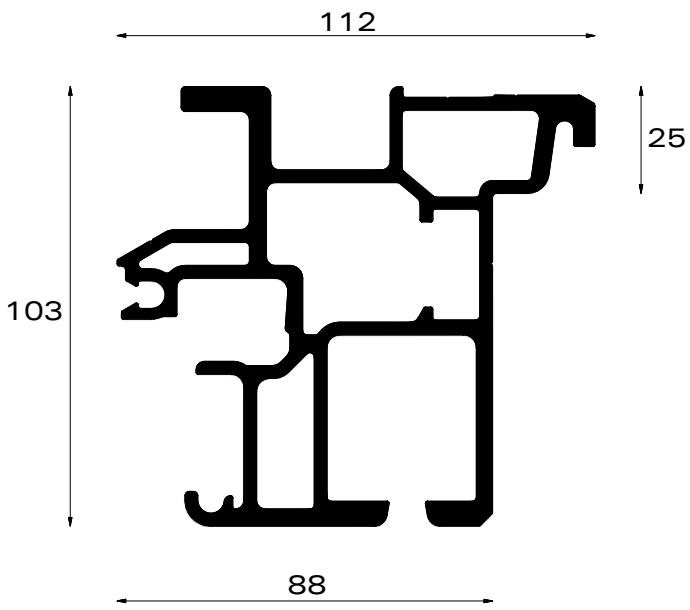

	PART NR.
* L = 9,8m	162-24980
* L = 13,6m	162-24136

*profile with pre-bending

Ix : 233cm^4
Iy : 174cm^4
± 5,7 kg/m

2a Roof stick for sliding roof

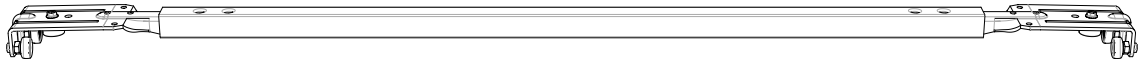

	PART NR.
SB=2550 - Type SP	224-01001
SB=2550 - Type AS (Al)	224-03001

2b Roof stick with anti-fly hook for sliding roof

	PART NR.
SB=2550 - Type SP	224-91001
SB=2550 - Type AS (Al)	224-93001

2c Roof stick for fixed roof with tarpaulin cover

	PART NR.
SB=2550 - Type SP	224-41201
SB=2550 - Type AS (Al)	224-43201

* Roof stick riveted to rail with monobolts

3a Collapsible backside

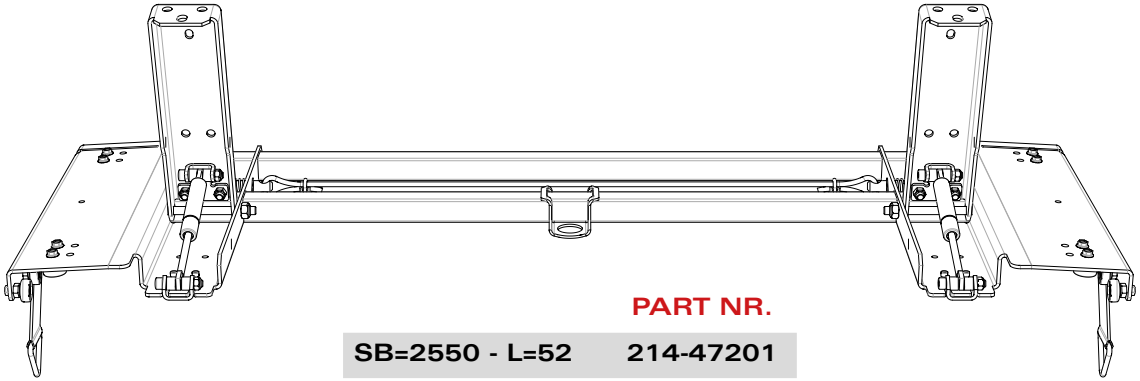

	PART NR.
SB=2550 - L=52	214-47201

9a Set accessories

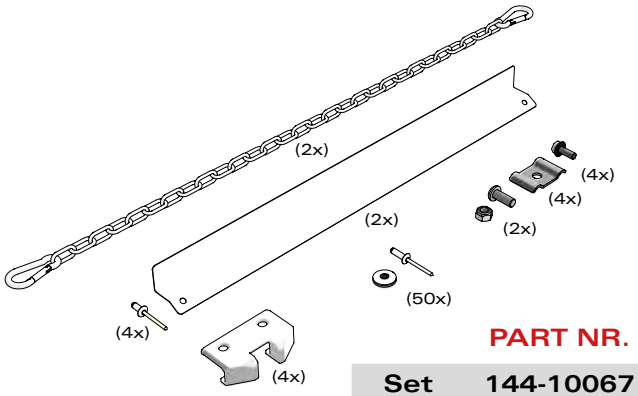

	PART NR.
Set	144-10067

3b Collapsible backside for fixed roof with tarpaulin cover

	PART NR.
SB=2550 - L=100	324-47001

9b Set accessories Twin

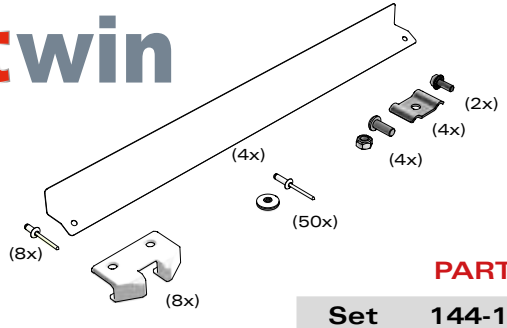

	PART NR.
Set	144-10082

* Kubus Trike Twin sliding roof: this set replaces the basic set accessories (144-10067)!

Front header

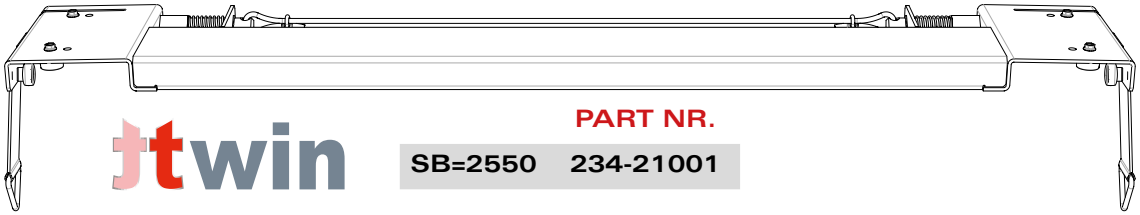

	PART NR.
SB=2550	234-21001

9c Set lock collapsible backside

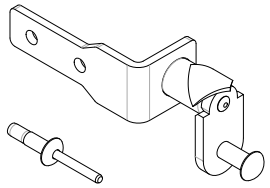

	PART NR.
Set	144-10086

9d Set accessories external unlocking

	PART NR.
Set	144-10174

4a Back beam

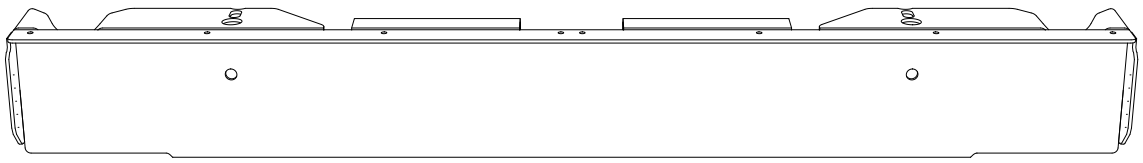

	PART NR.
SB=2550 - 125Z	193-11001
Mounting set	144-10022

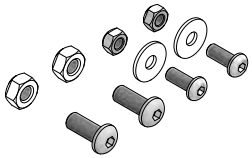

4b Back beam

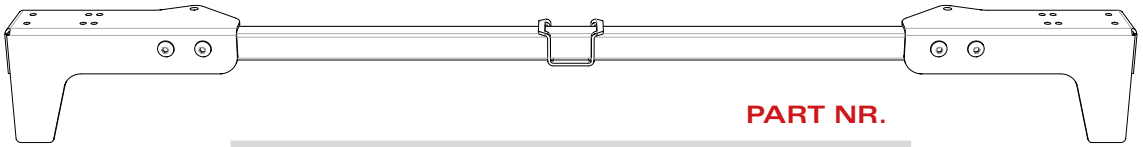

	PART NR.
Set back beam tube 30x30mm	144-10037
Tube 30x30x2mm	112-07001

Rain strip for back beam (4a)

	PART NR.
SB=2550	192-01601

Rain strip for front header

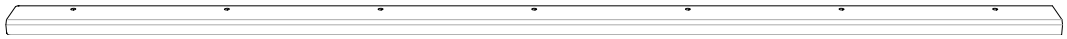

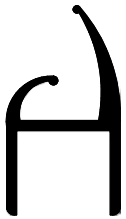

ttwin

	PART NR.
Rain strip SB=2550	192-01606
PVC pelmet L = 2,6m (black)	242-20001
Mounting strip 30x5mm L = 2,6m	292-07001

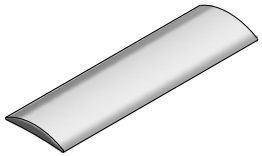

10 Folding plate

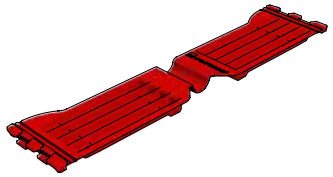

	PART NR.
Type 400	242-01004
Type 500	242-01005
Type 600	242-01006
Type 700	242-01007
Type 570	242-01057
Type 650	242-01065

7 PVC pelmet (black)

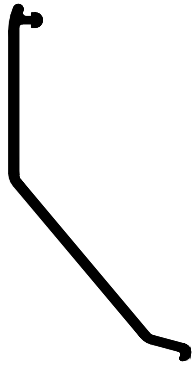

	PART NR.
L = 9m	242-12109
L = 14m	242-12114

12 Pull bars & webbing

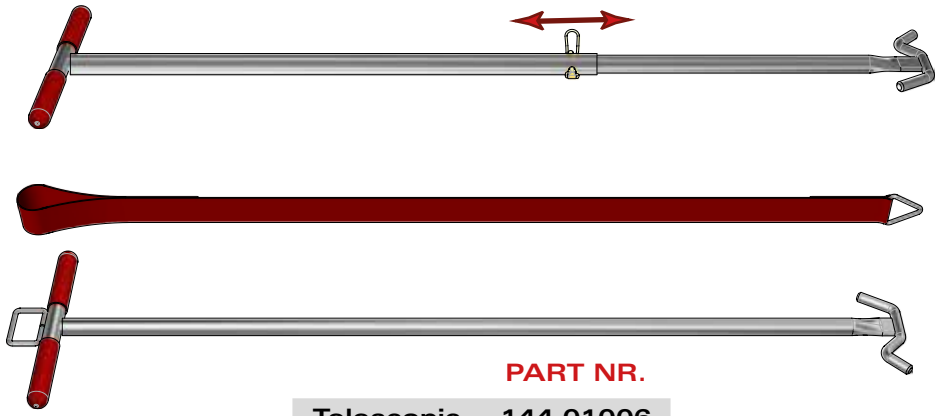

PART NR.

Telescopic	144-01006
Webbing	144-01500
Standard	144-01003

8 Pillar bracket

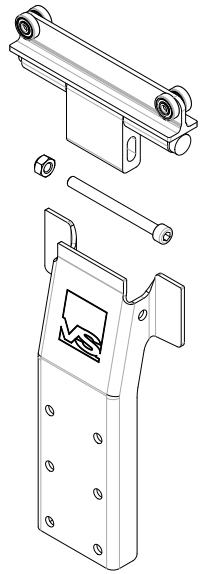

PART NR.

Bracket	264-01001
Bolt & nut	144-10015
Plate	262-05007

6 Set mounting plates

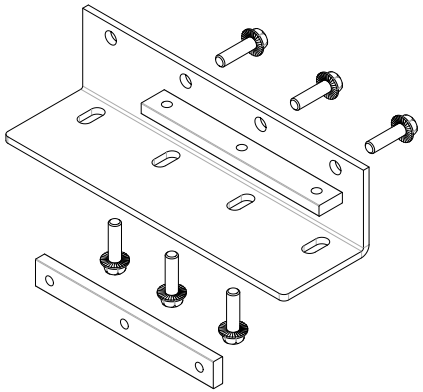

PART NR.

154-03018

* contains 4x the parts of the picture

5 Trike roller

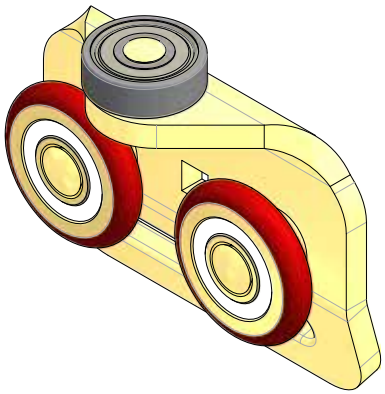

PART NR.

284-10024

11 Carapax plate

PART NR.

291-03004

* only needed for roof with Carapax cover

Spare Parts

omega kubus trike

For roof sticks

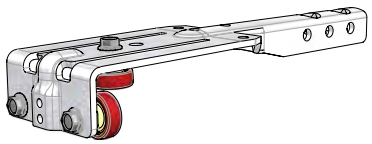

Assembled bracket

PART NR.

174-02001

Roller bearing plastic

PART NR.

132-01001

Bolt tensilock M6x16mm

PART NR.

091-23001

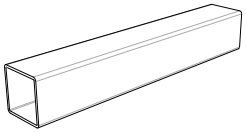

Tube30x30x1,5mm

	PART NR.
L = 2185mm	112-01003

For collapsible backside

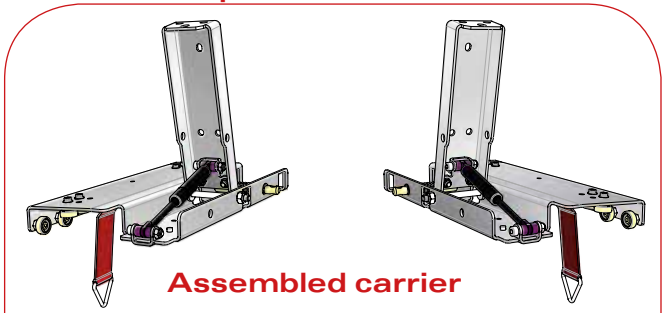

Assembled carrier

	PART NR.
Left	204-47201
Right	204-47202

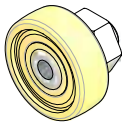

Roller bearing steel

PART NR.

132-03001

Bolt tensilock M6x16mm

PART NR.

091-23001

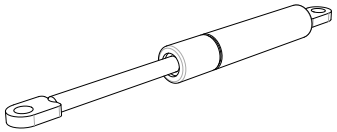

Gas spring 700N

PART NR.

302-01001

For accessories set

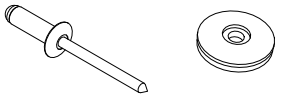

Rivet & washer

	PART NR.
50 pieces	144-10003

Rope clamp

PART NR.

292-01001

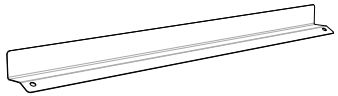

Protection plate

PART NR.

142-06006

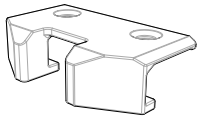

Locking nose

PART NR.

142-05020

Chain with 2 hooks

PART NR.

142-07001

For mounting set

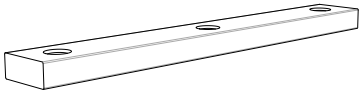

Mounting block

PART NR.

152-02001

Bolt tensilock M10x35mm

PART NR.

091-23002

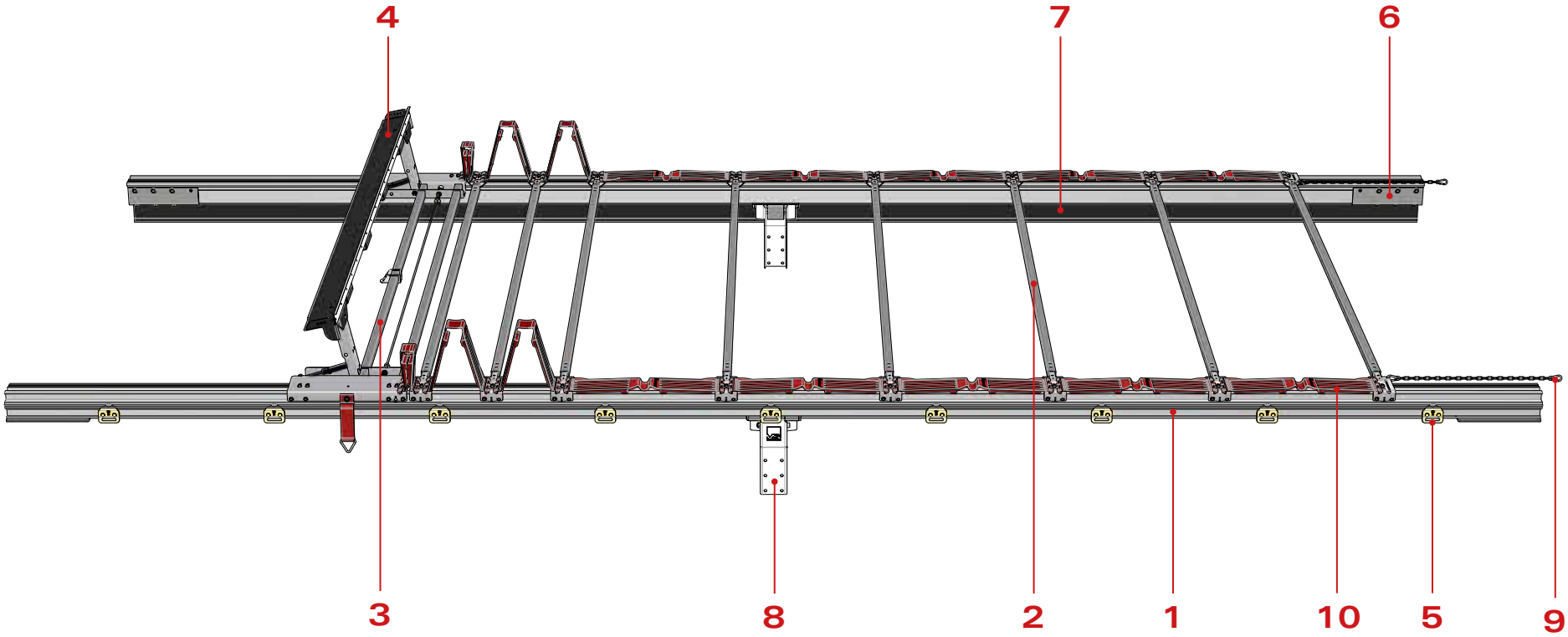

1	Kubus Trike Light rail	7	PVC pelmet
2	Roof stick	8	Pillar bracket
3	Collapsible backside	9	Set accessories
4	Back beam	10	Folding plate
5	Trike roller	11	Carapax plate
6	Set mounting plates	12	Pull bar

1 Kubus Trike Light rail

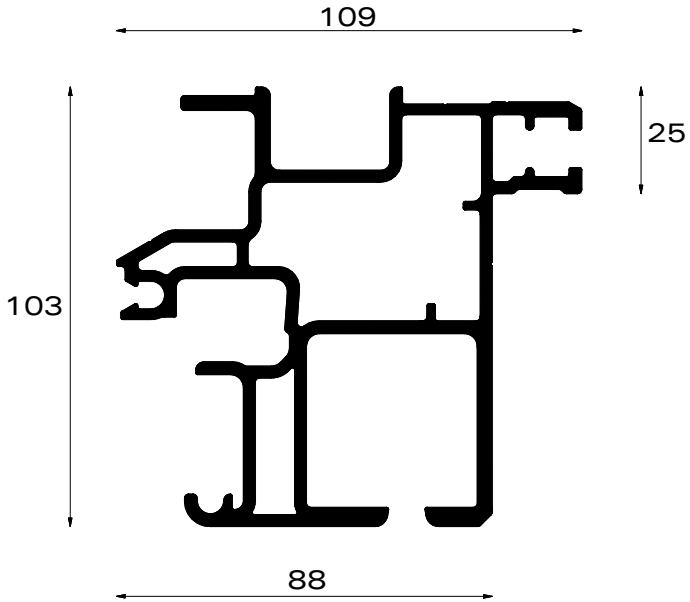

	PART NR.
L = 7,8m	162-25780
L = 8,5m	162-25850

Ix : 188cm^4
Iy : 145cm^4
± 4,8 kg/m

2a Roof stick for sliding roof

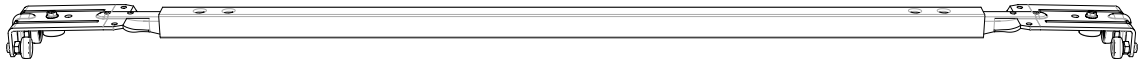

	PART NR.
SB=2550 - Type SP	224-01001
SB=2550 - Type AS (Al)	224-03001

2b Roof stick for fixed roof with polyester cover

fix

	PART NR.
SB=2550 - Type SP	224-41101
SB=2550 - Type AS (Al)	224-43101
Mounting set roof stick fix	144-10048

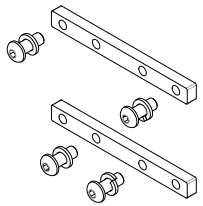

* Roof stick screwed to rail with bolts

* 1 set/roof stick

2c Roof Stick for fixed roof with tarpaulin cover

fix

	PART NR.
SB=2550 - Type SP	224-41211
SB=2550 - Type AS (Al)	224-43211
Mounting set roof stick fix	144-10048

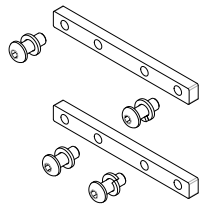

* Roof stick screwed to rail with bolts

* 1 set/roof stick

3a Collapsible backside

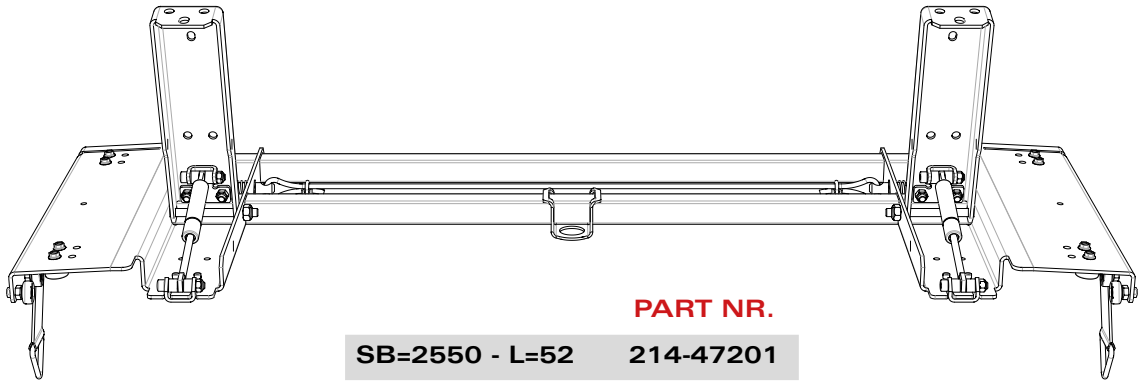

	PART NR.
SB=2550 - L=52	214-47201

9a Set accessories

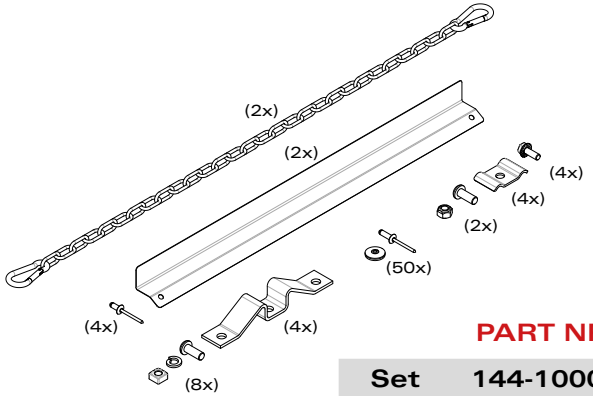

	PART NR.
Set	144-10001

3b Collapsible backside for fixed roof with tarpaulin cover

	PART NR.
SB=2550 - L=100	324-47201

9b Set accessories Twin

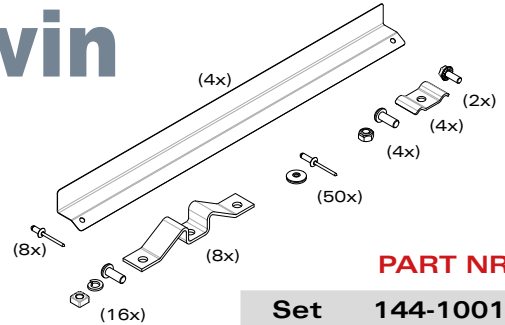

	PART NR.
Set	144-10018

* Kubus Trike Light Twin sliding roof: this set replaces the basic set accessories (144-10001)!

Front header

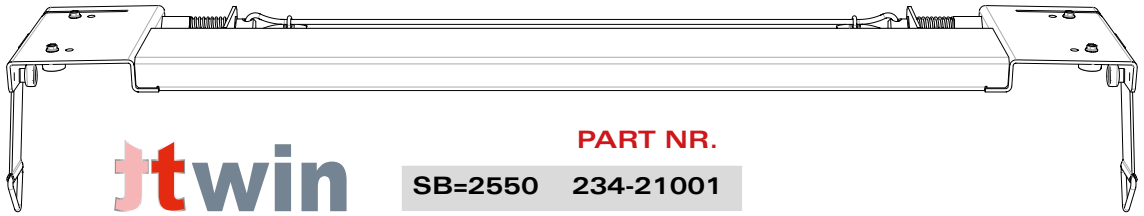

	PART NR.
SB=2550	234-21001

9c Set lock collapsible backside

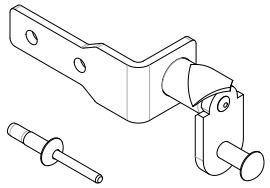

	PART NR.
Set	144-10086

9d Set accessories external unlocking

	PART NR.
Set	144-10174

4a Back beam

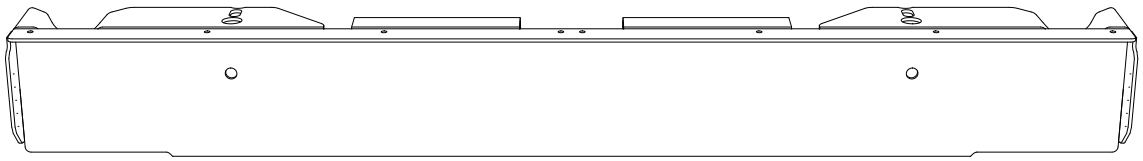

	PART NR.
SB=2550 - 125Z	193-11001
Mounting set	144-10022

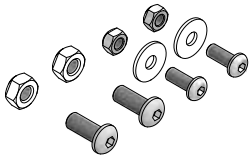

4b Back beam

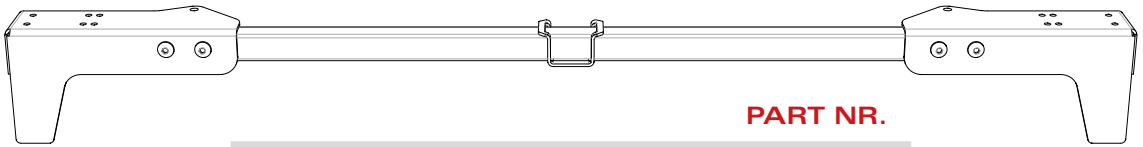

	PART NR.
Set back beam tube 30x30mm	144-10037
Tube 30x30x2mm	112-07001

Rain strip for back beam (4a)

	PART NR.
SB=2550	192-01601

Rain strip for front header

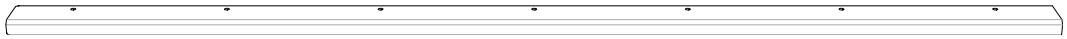

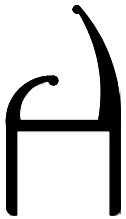

ttwin

	PART NR.
Rain strip SB=2550	192-01606
PVC pelmet L = 2,6m (black)	242-20001
Mounting strip30x5mm L= 2,6m	292-07001

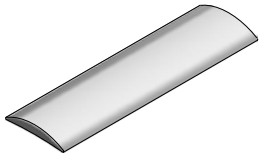

10 Folding plate

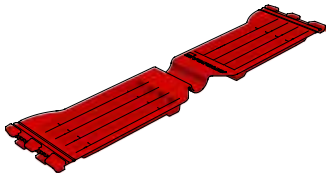

	PART NR.
Type 400	242-01004
Type 500	242-01005
Type 600	242-01006
Type 700	242-01007
Type 570	242-01057
Type 650	242-01065

7 PVC pelmet (black)

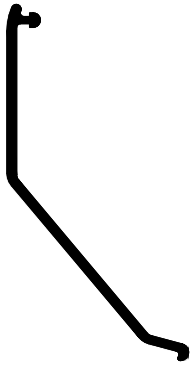

	PART NR.
L = 9m	242-12109
L = 14m	242-12114

12 Pull bars & webbing

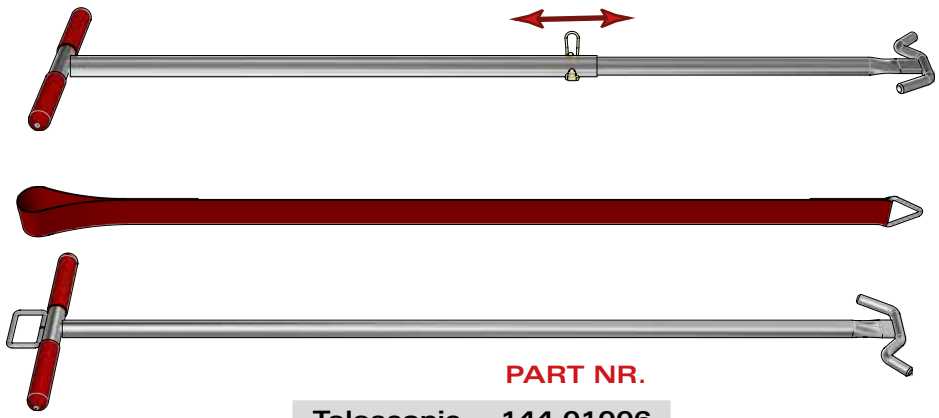

	PART NR.
Telescopic	144-01006
Webbing	144-01500
Standard	144-01003

8 Pillar bracket

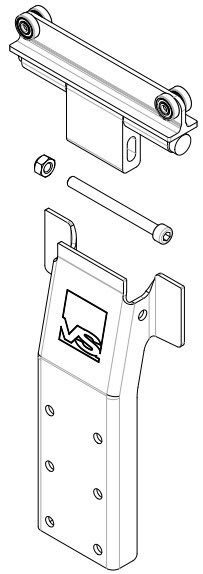

	PART NR.
Bracket	264-01001
Bolt & nut	144-10015
Plate	262-05007

6 Set mounting plates

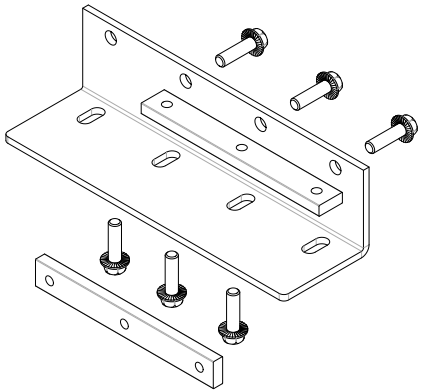

PART NR.

154-03018

* contains 4x the parts of the picture

5 Trike roller

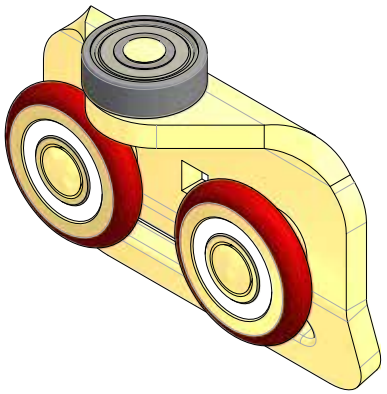

PART NR.

284-10024

11 Carapax plate

PART NR.

291-03004

* only needed for roof with Carapax cover

Spare Parts

omega
kubus trike light

For roof sticks

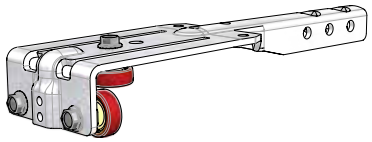

Assembled bracket

PART NR.

174-02001

Roller bearing plastic

PART NR.

132-01001

Bolt tensilock M6x16mm

PART NR.

091-23001

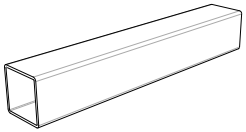

Tube30x30x1,5mm

	PART NR.
L = 2185mm	112-01003

For collapsible backside

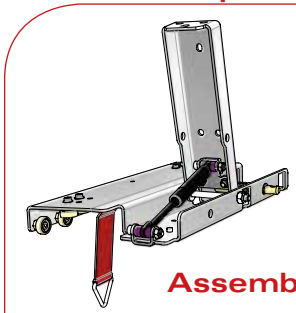

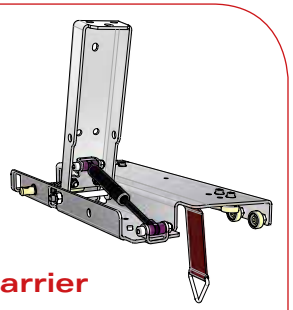

Assembled carrier

	PART NR.
Left	204-47201
Right	204-47202

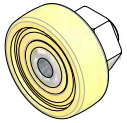

Roller bearing steel

PART NR.

132-03001

Bolt tensilock M6x16mm

PART NR.

091-23001

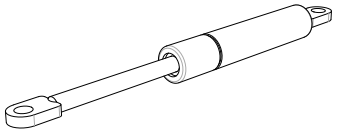

Gas spring 700N

PART NR.

302-01001

For accessories set

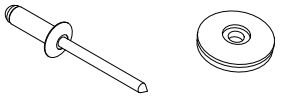

Rivet & washer

	PART NR.
50 pieces	144-10003

Rope clamp

PART NR.

292-01001

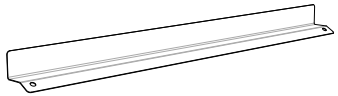

Protection plate

PART NR.

142-06006

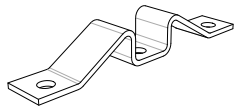

Locking nose

PART NR.

142-05002

Chain with 2 hooks

PART NR.

142-07001

For mounting set

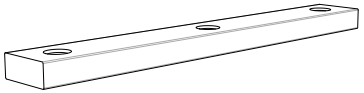

Mounting block

PART NR.

152-02001

Bolt tensilock M10x35mm

PART NR.

091-23002

omega
micro trike

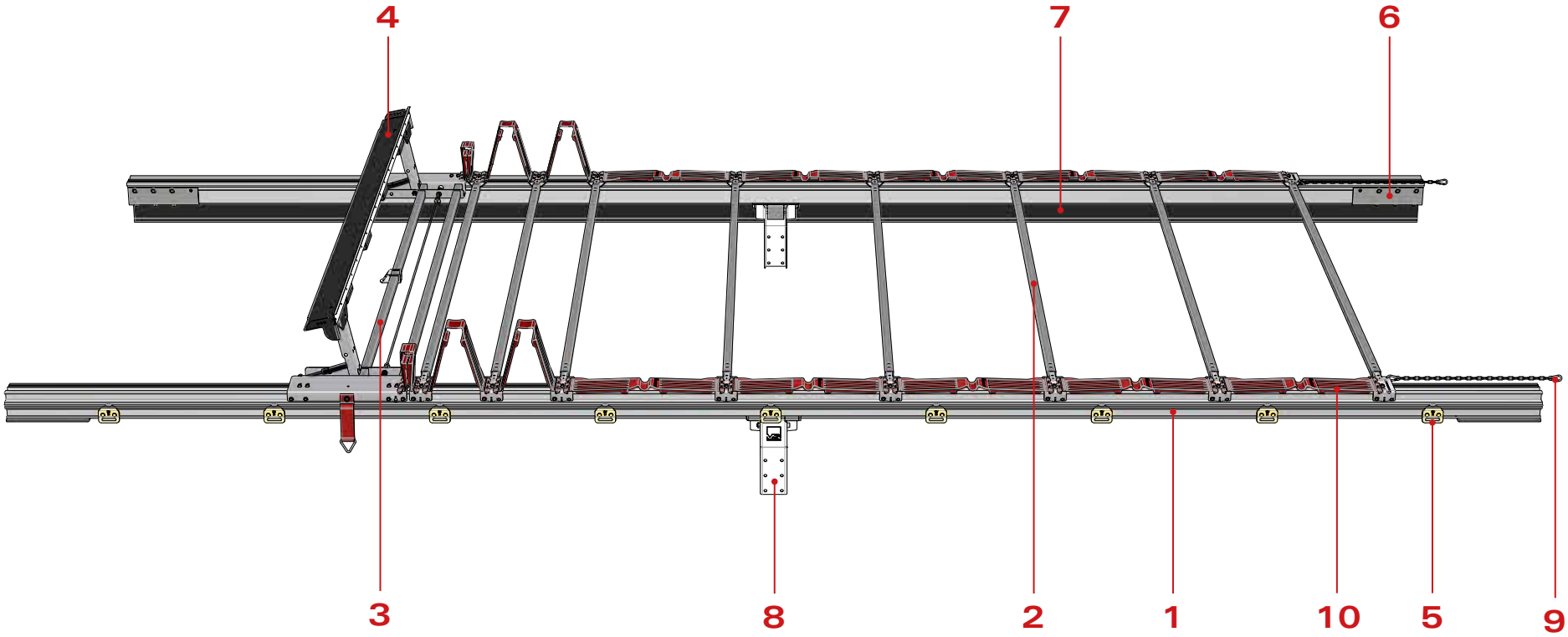

1	Micro Trike rail	7	PVC pelmet
2	Roof stick	8	Pillar bracket
3	Collapsible backside	9	Set accessories
4	Back beam	10	Folding plate
5	Trike roller	11	Carapax plate
6	Set mounting plates	12	Pull bar

1 Micro Trike rail

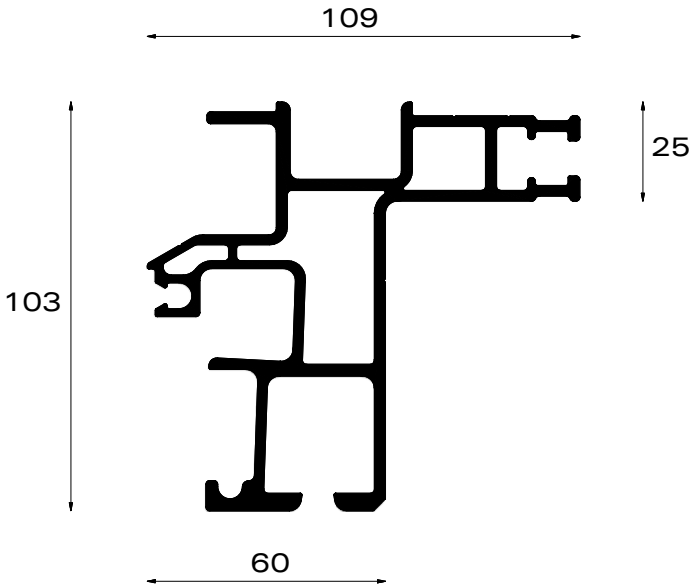

	PART NR.
L = 4,5m	162-34450
L = 7,8m*	162-34780
L = 8,5m*	162-34850

Ix : 149cm^4
Iy : 104cm^4
± 4 kg/m

* pre-bended

2a Roof stick for sliding roof

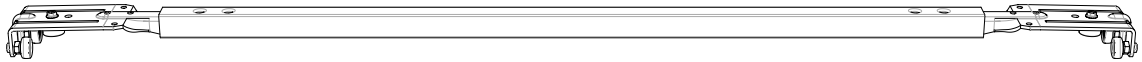

	PART NR.
SB=2550 - Type SP	224-01001
SB=2550 - Type AS (Al)	224-03001

2b Roof stick for fixed roof with polyester cover

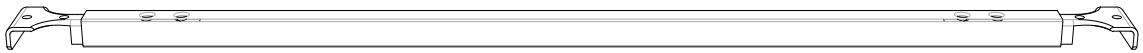

	PART NR.
SB=2550 - Type SP	224-41101
SB=2550 - Type AS (Al)	224-43101
Mounting set roof stick fix	144-10048

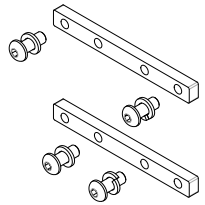

* Roof stick screwed to rail with bolts

* 1 set/roof stick

2c Roof Stick for fixed roof with tarpaulin cover

	PART NR.
SB=2550 - Type SP	224-41211
SB=2550 - Type AS (Al)	224-43211
Mounting set roof stick fix	144-10048

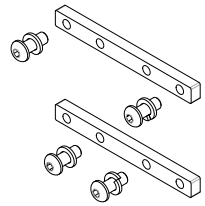

* Roof stick screwed to rail with bolts

* 1 set/roof stick

3a Collapsible backside

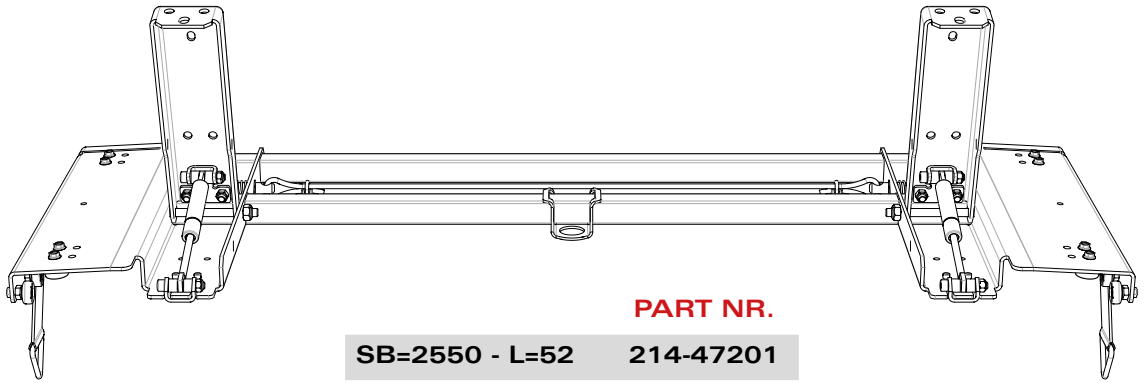

	PART NR.
SB=2550 - L=52	214-47201

9a Set accessories

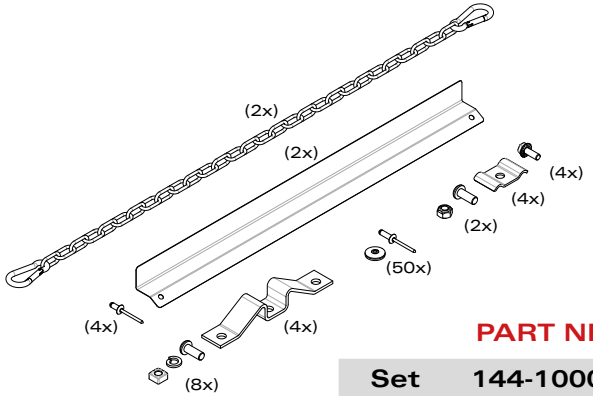

	PART NR.
Set	144-10001

3b Collapsible backside for fixed roof with tarpaulin cover

	PART NR.
SB=2550 - L=100	324-47201

9b Set accessories Twin

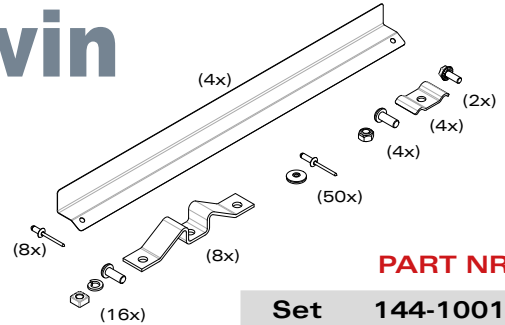

	PART NR.
Set	144-10018

* Micro Trike Twin sliding roof: this set replaces the basic set accessories (144-10001)!

Front header

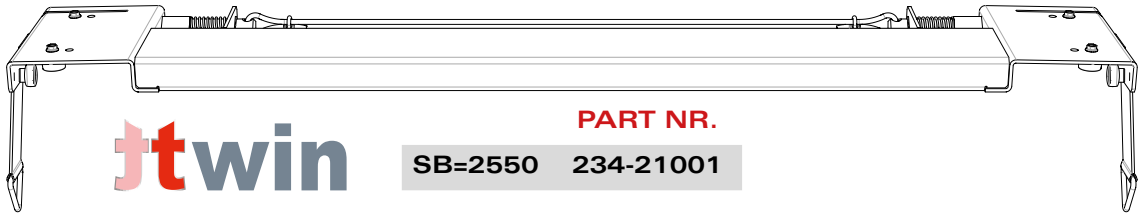

	PART NR.
SB=2550	234-21001

9c Set lock collapsible backside

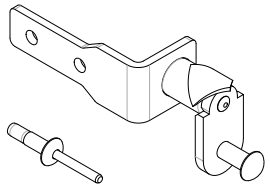

	PART NR.
Set	144-10086

9d Set accessories external unlocking

	PART NR.
Set	144-10174

4a Back beam

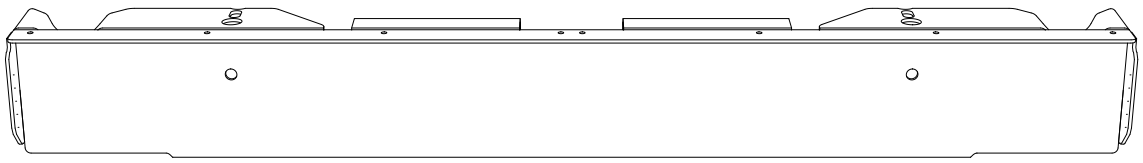

	PART NR.
SB=2550 - 125Z	193-11001
Mounting set	144-10022

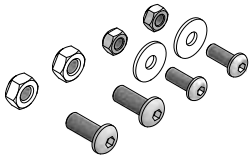

4b Back beam

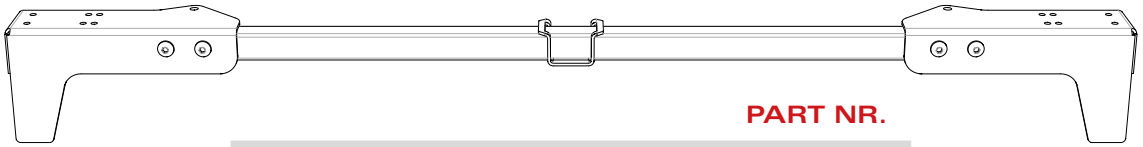

	PART NR.
Set back beam tube 30x30mm	144-10037
Tube 30x30x2mm	112-07001

Rain strip for back beam (4a)

	PART NR.
SB=2550	192-01601

Rain strip for front header

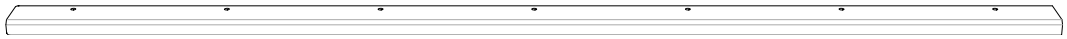

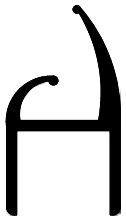

ttwin

	PART NR.
Rain strip SB=2550	192-01606
PVC pelmet L = 2,6m (black)	242-20001
Mounting strip30x5mm L= 2,6m	292-07001

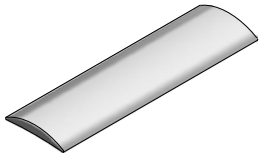

10 Folding plate

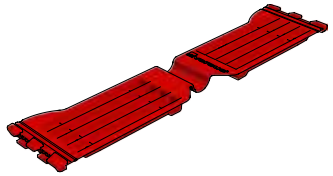

	PART NR.
Type 400	242-01004
Type 500	242-01005
Type 600	242-01006
Type 700	242-01007
Type 570	242-01057
Type 650	242-01065

7 PVC pelmet (black)

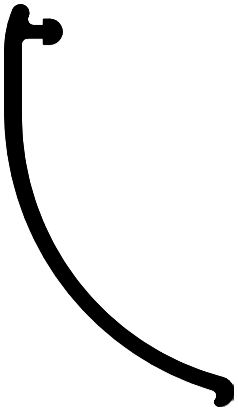

	PART NR.
L = 9m	242-15109
L = 14m	242-15114

12 Pull bars & webbing

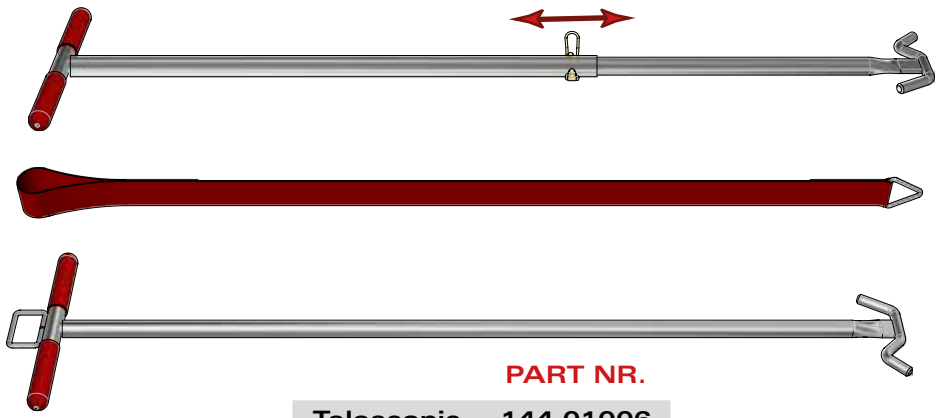

	PART NR.
Telescopic	144-01006
Webbing	144-01500
Standard	144-01003

8 Pillar bracket

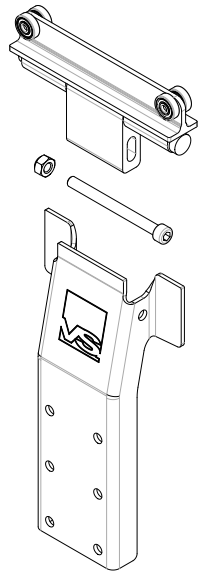

	PART NR.
Bracket	264-01001
Bolt & nut	144-10015
Plate	262-05007

6 Set mounting plates

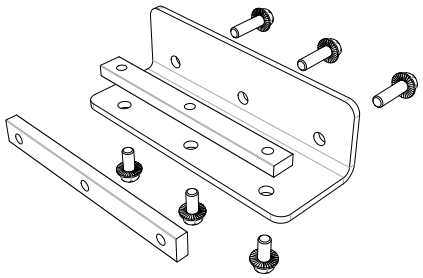

PART NR.

154-03041

* contains 4x the parts of the picture

5 Trike roller

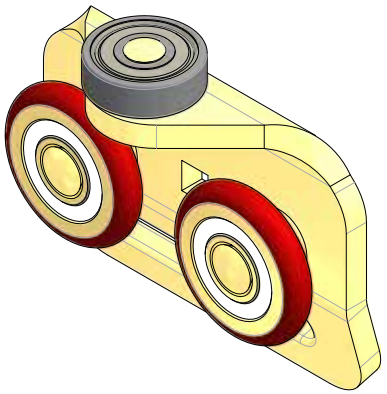

PART NR.

284-10024

11 Carapax plate

PART NR.

291-03004

* only needed for roof with Carapax cover

Spare Parts

omega micro trike

For roof sticks

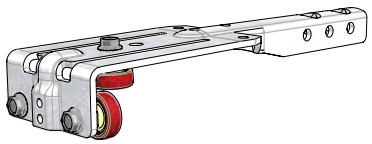

Assembled bracket

PART NR.

174-02001

Roller bearing plastic

PART NR.

132-01001

Bolt tensilock M6x16mm

PART NR.

091-23001

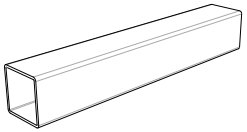

Tube30x30x1,5mm

	PART NR.
L = 2185mm	112-01003

For collapsible backside

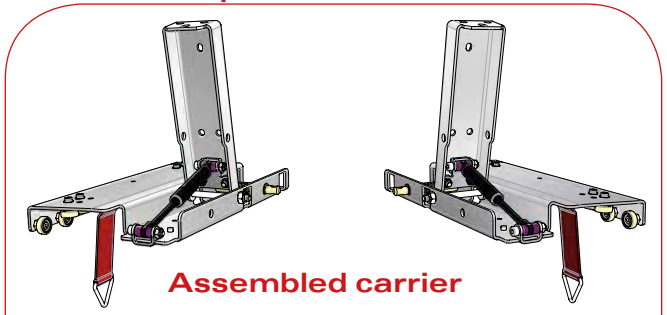

Assembled carrier

	PART NR.
Left	204-47201
Right	204-47202

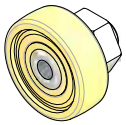

Roller bearing steel

PART NR.

132-03001

Bolt tensilock M6x16mm

PART NR.

091-23001

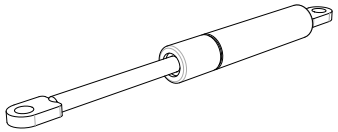

Gas spring 700N

PART NR.

302-01001

For accessories set

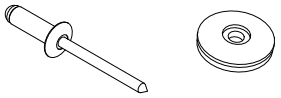

Rivet & washer

	PART NR.
50 pieces	144-10003

Rope clamp

PART NR.

292-01001

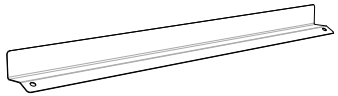

Protection plate

PART NR.

142-06006

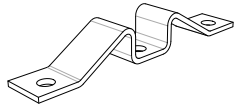

Locking nose

PART NR.

142-05002

Chain with 2 hooks

PART NR.

142-07001

For mounting set

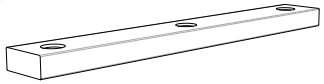

Mounting block

PART NR.

152-02001

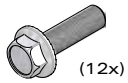

(12x)

Bolt tensilock M10x20mm

PART NR.

091-23004

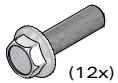

(12x)

Bolt tensilock M10x35mm

PART NR.

091-23002

omega
alto penta

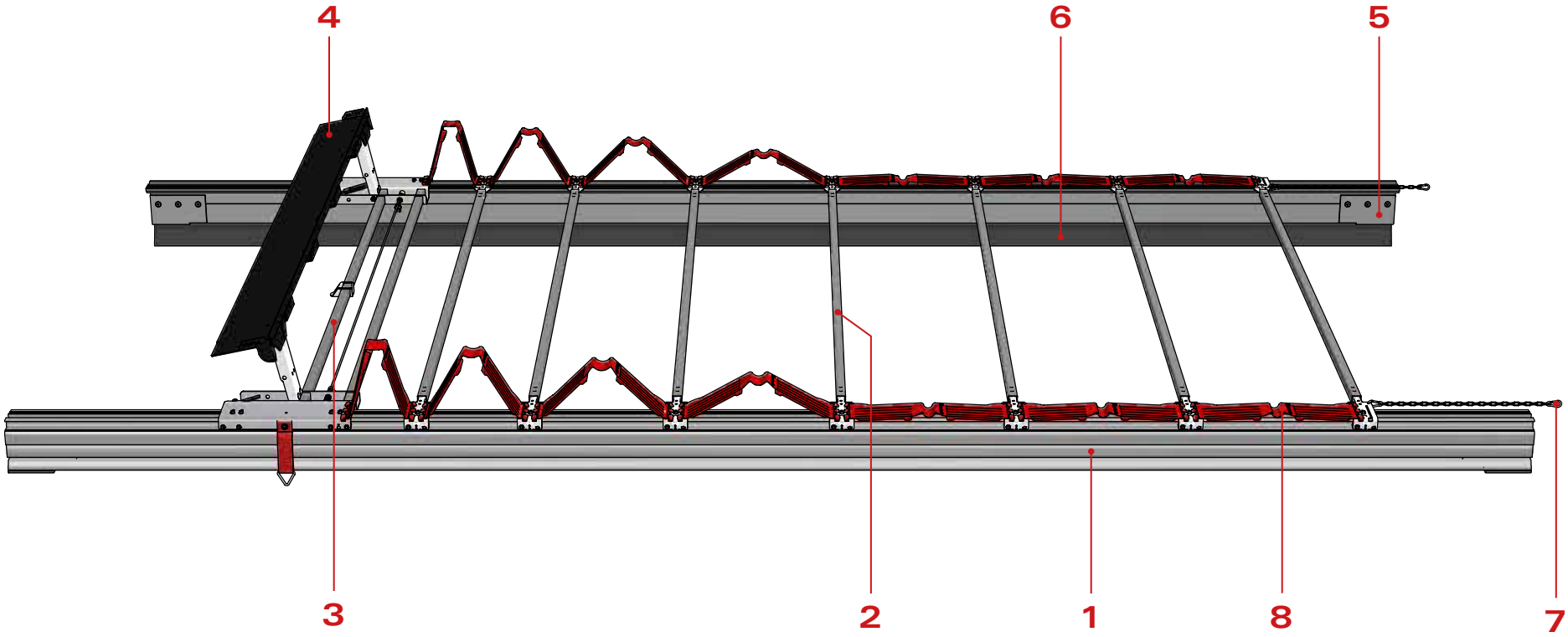

1	Alto Penta rail	6	PVC pelmet
2	Roof stick	7	Set accessories
3	Collapsible backside	8	Folding plate
4	Back beam	9*	Carapax plate
5	Set mounting plates	10*	Pull bar

* Not visible on the composition drawing above.

1 Alto Penta rail

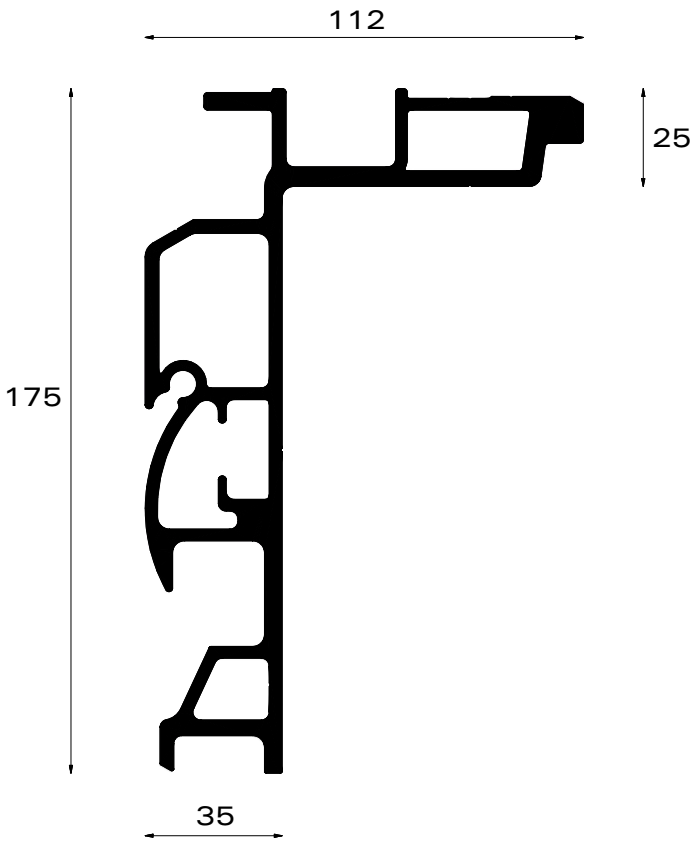

	PART NR.
L = 7,8m	162-37780
L = 8,5m	162-37850
* L = 13,6m	162-37136

*profile with pre-bending & milling

Ix : 711cm^4
Iy : 213cm^4
± 6,1 kg/m

2a Roof stick for sliding roof

	PART NR.
SB=2550 - Type SP	224-01001
SB=2550 - Type AS (Al)	224-03001

2b Roof stick with anti-fly hook for sliding roof

	PART NR.
SB=2550 - Type SP	224-91001
SB=2550 - Type AS (Al)	224-93001

2c Roof Stick for fixed roof with tarpaulin cover

	PART NR.
SB=2550 - Type SP	224-41201
SB=2550 - Type AS (Al)	224-43201

* Roof stick riveted to rail with monobolts

3a Collapsible backside

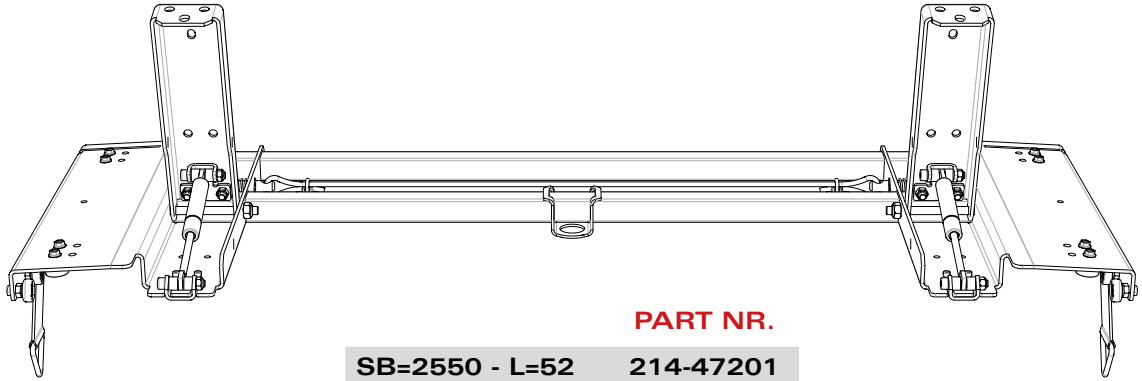

	PART NR.
SB=2550 - L=52	214-47201

3b Collapsible backside for fixed roof with tarpaulin cover

fix

	PART NR.
SB=2550 - L=100	324-47001

Front header

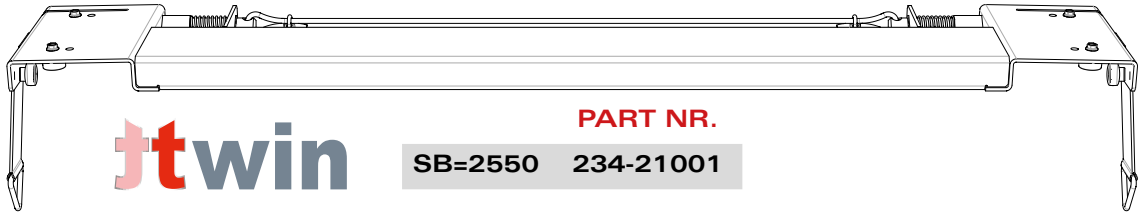

twin

	PART NR.
SB=2550	234-21001

5 Set mounting plates

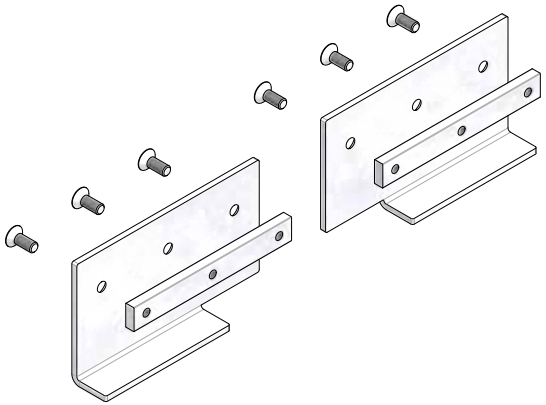

PART NR.

154-03100

* contains 2x the parts of the picture

6 PVC pelmet (black)

	PART NR.
L = 9m	242-16109
L = 14m	242-16114

4a Back beam

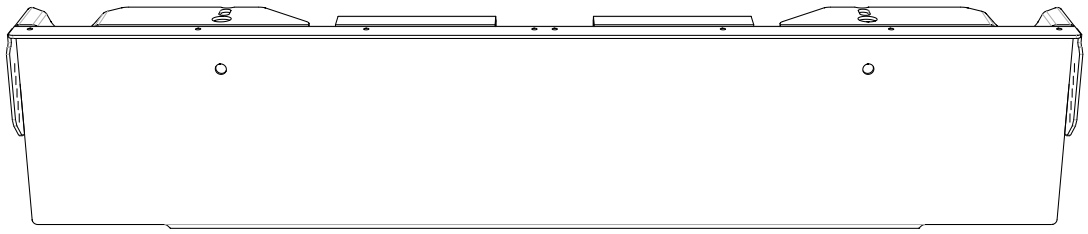

	PART NR.
SB=2550 - 208Z	193-18001
Mounting set	144-10022

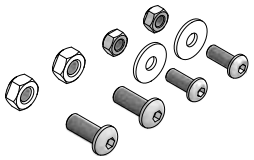

4b Back beam

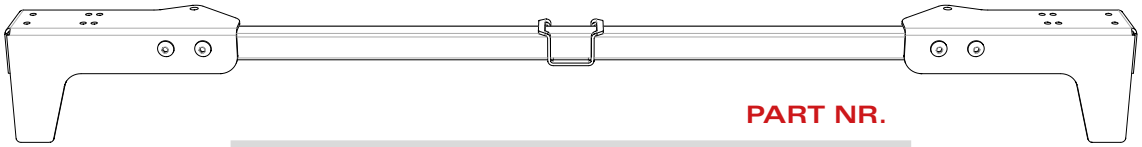

	PART NR.
Set back beam tube 30x30mm	144-10037
Tube 30x30x2mm	112-07001

Rain strip for back beam (4a)

	PART NR.
SB=2550	192-01601

Rain strip for front header

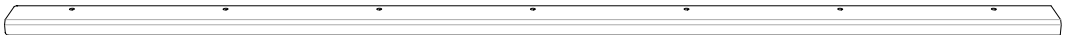

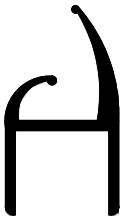

ttwin

	PART NR.
Rain strip SB=2550	192-01606
PVC pelmet L = 2,6m (black)	242-20001
Mounting strip30x5mm L= 2,6m	292-07001

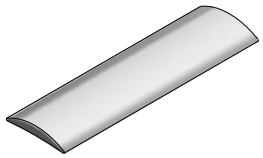

8 Folding plate

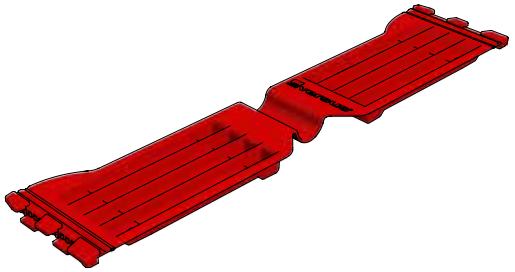

	PART NR.
Type 400	242-01004
Type 500	242-01005
Type 600	242-01006
Type 700	242-01007
Type 570	242-01057
Type 650	242-01065

7a Set accessories

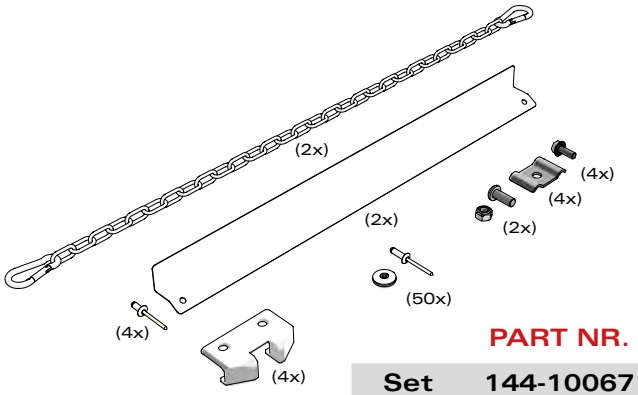

PART NR.	
Set	144-10067

7b Set accessories Twin

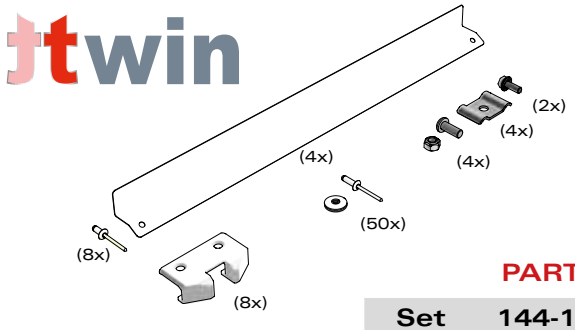

PART NR.	
Set	144-10082

* Alto Penta Twin sliding roof: this set accessories replaces the basic set accessories (144-10067)!

7c Set lock collapsible backside

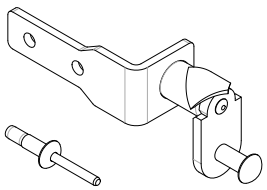

PART NR.	
Set	144-10086

7d Set accessories external unlocking

PART NR.	
Set	144-10174

9 Carapax plate

PART NR.
291-03004

* only needed for roof with Carapax cover

10 Pull bars & webbing

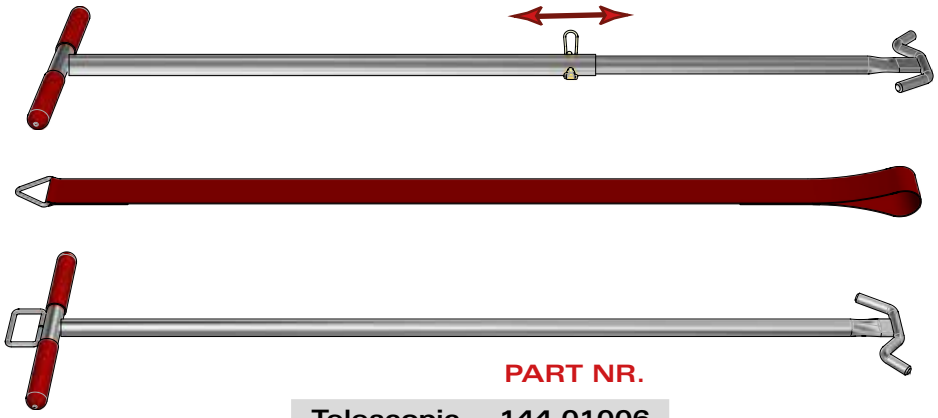

PART NR.	
Telescopic	144-01006
Webbing	144-01500
Standard	144-01003

Spare Parts

omega alto penta

For roof sticks

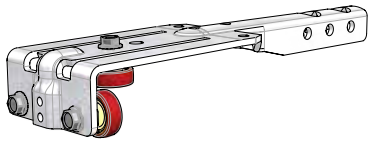

Assembled bracket

PART NR.

174-02001

Roller bearing plastic

PART NR.

132-01001

Bolt tensilock M6x16mm

PART NR.

091-23001

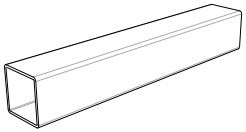

Tube30x30x1,5mm

	PART NR.
L = 2185mm	112-01003

For collapsible backside

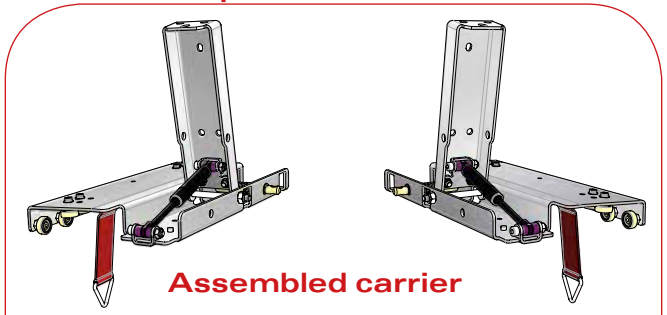

Assembled carrier

	PART NR.
Left	204-47201
Right	204-47202

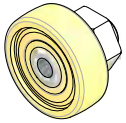

Roller bearing steel

PART NR.

132-03001

Bolt tensilock M6x16mm

PART NR.

091-23001

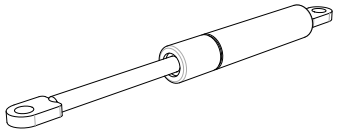

Gas spring 700N

PART NR.

302-01001

For accessories set

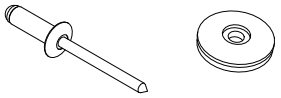

Rivet & washer

	PART NR.
50 pieces	144-10003

Rope clamp

PART NR.

292-01001

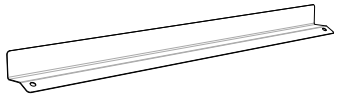

Protection plate

PART NR.

142-06006

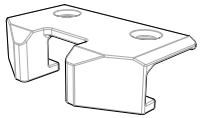

Locking nose

PART NR.

142-05020

Chain with 2 hooks

PART NR.

142-07001

For mounting set

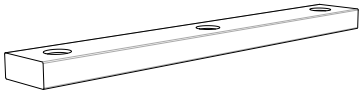

Mounting block

PART NR.

152-02001

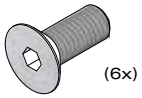

Bolt M10x25mm

PART NR.

091-26002

omega
duo penta

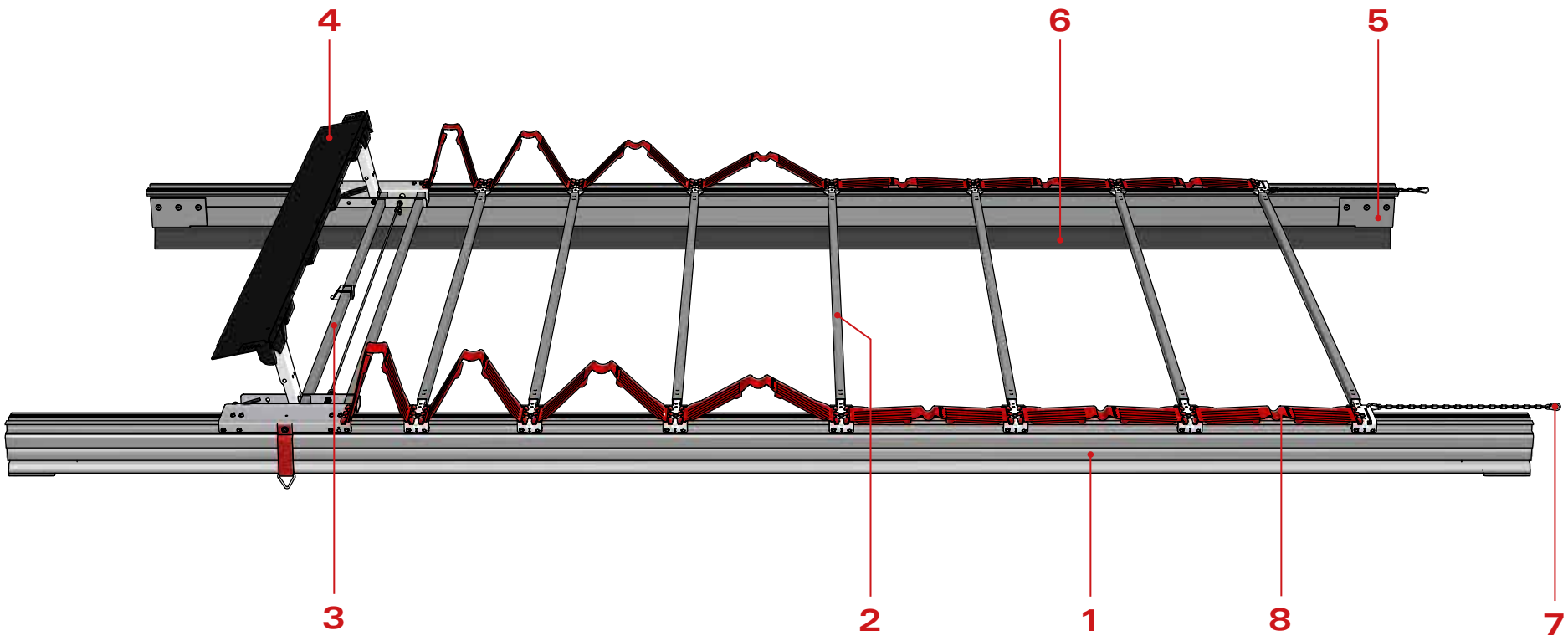

1	Duo Penta rail	6	PVC pelmet
2	Roof stick	7	Set accessories
3	Collapsible backside	8	Folding plate
4	Back beam	9*	Carapax plate
5	Set mounting plates	10*	Pull bar

* Not visible on the composition drawing above.

1 Duo Penta rail

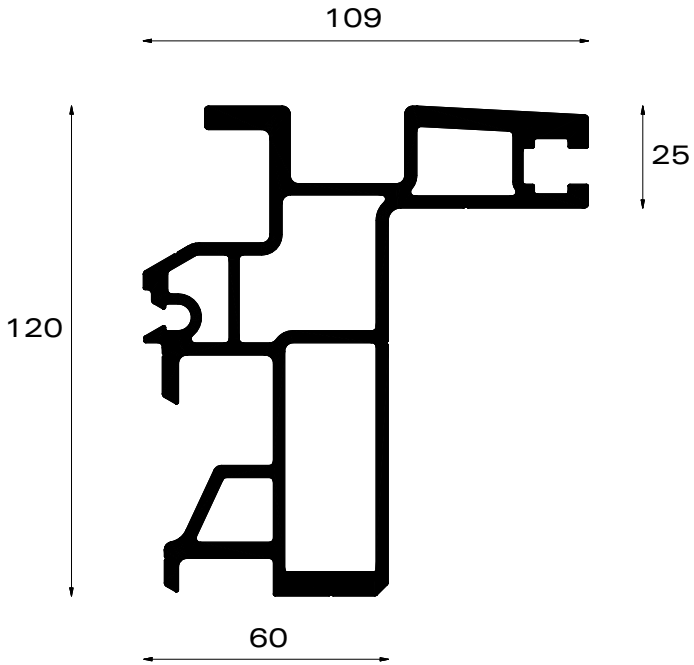

	PART NR.
L = 5m	162-30500
L = 7,8m	162-30780
L = 8,5m	162-30850
* L = 10,5m	162-30105
* L = 13,6m	162-30136

*profile with pre-bending & milling

Ix : 325cm⁴
Iy : 174cm⁴
± 5,7 kg/m

2a Roof stick for sliding roof

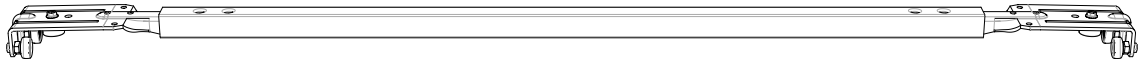

	PART NR.
SB=2550 - Type SP	224-01001
SB=2550 - Type AS (Al)	224-03001

2b Roof stick for fixed roof with polyester cover

	PART NR.
SB=2550 - Type SP	224-41101
SB=2550 - Type AS (Al)	224-43101
Mounting set roof stick fix	144-10048

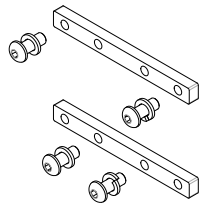

* Roof stick screwed to rail with bolts

* 1 set/roof stick

2c Roof stick for fixed roof with tarpaulin cover

	PART NR.
SB=2550 - Type SP	224-41211
SB=2550 - Type AS (Al)	224-43211
Mounting set roof stick fix	144-10048

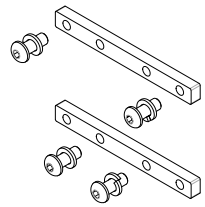

* Roof stick screwed to rail with bolts

* 1 set/roof stick

3a Collapsible backside

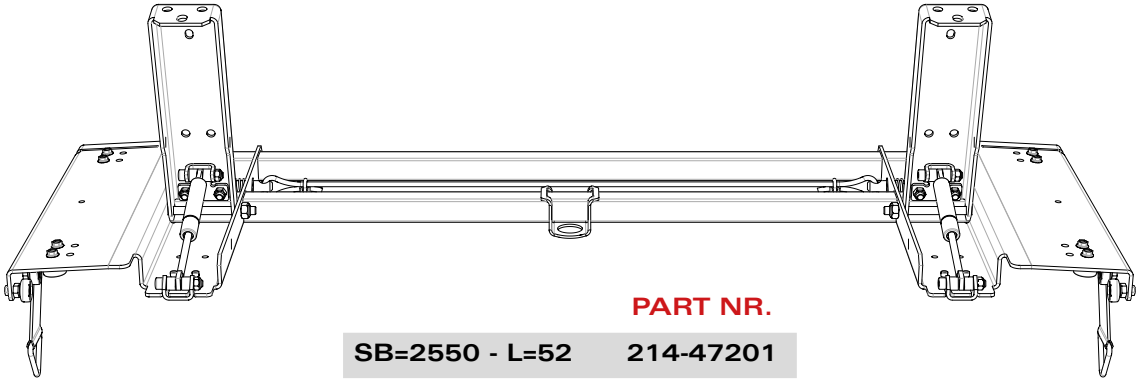

	PART NR.
SB=2550 - L=52	214-47201

7a Set accessories

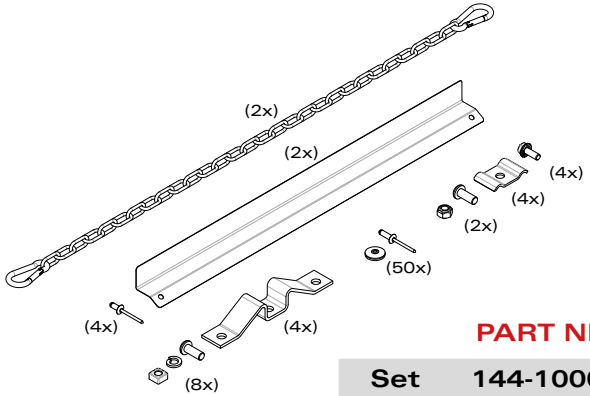

	PART NR.
Set	144-10001

3b Collapsible backside for fixed roof with tarpaulin cover

	PART NR.
SB=2550 - L=100	324-47201

7b Set accessories Twin

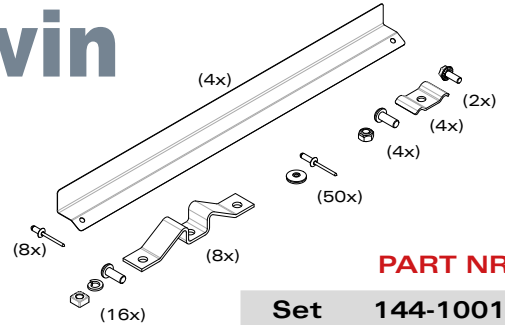

	PART NR.
Set	144-10018

* Duo Penta Twin sliding roof: this set replaces the basic set accessories (144-10001)!

Front header

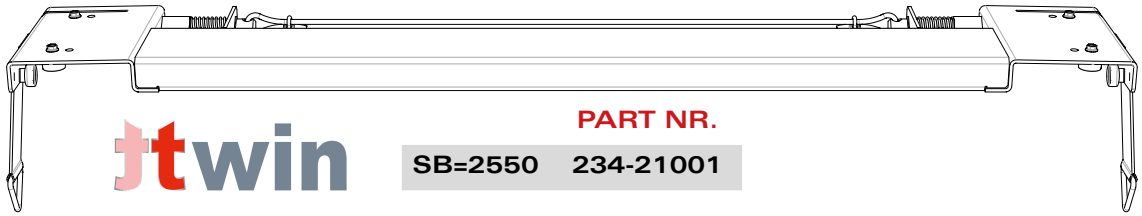

	PART NR.
SB=2550	234-21001

7c Set lock collapsible backside

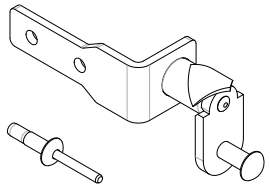

	PART NR.
Set	144-10086

7d Set accessories external unlocking

	PART NR.
Set	144-10174

4a Back beam

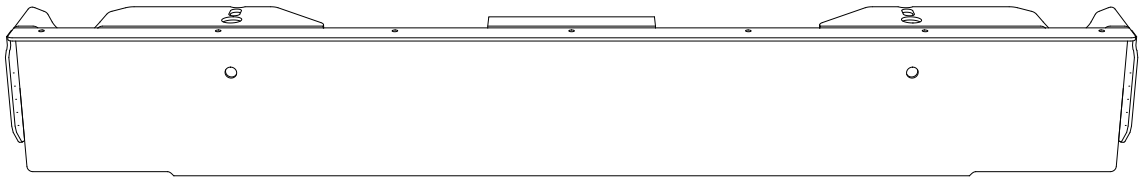

	PART NR.
SB=2550 - 145Z	193-14001
Mounting set	144-10022

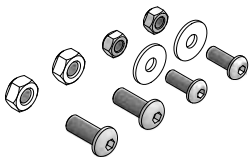

4b Back beam

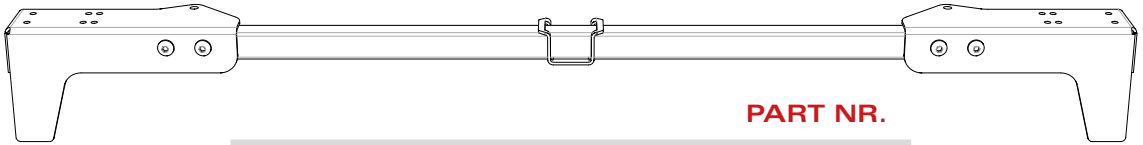

	PART NR.
Set back beam tube 30x30mm	144-10037
Tube 30x30x2mm	112-07001

Rain strip for back beam (4a)

	PART NR.
SB=2550	192-01601

Rain strip for front header

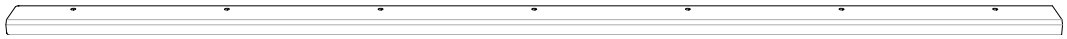

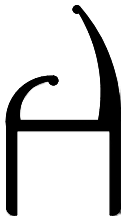

ttwin

	PART NR.
Rain strip SB=2550	192-01606
PVC pelmet L = 2,6m (black)	242-20001
Mounting strip 30x5mm L = 2,6m	292-07001

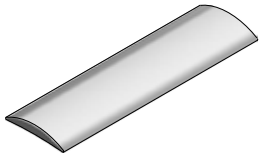

8 Folding plate

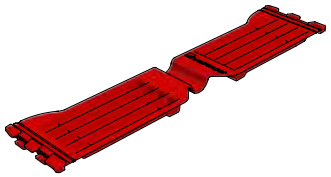

	PART NR.
Type 400	242-01004
Type 500	242-01005
Type 600	242-01006
Type 700	242-01007
Type 570	242-01057
Type 650	242-01065

6 PVC pelmet (black)

	PART NR.
L = 9m	242-02109
L = 14m	242-02114

10 Pull bars & webbing

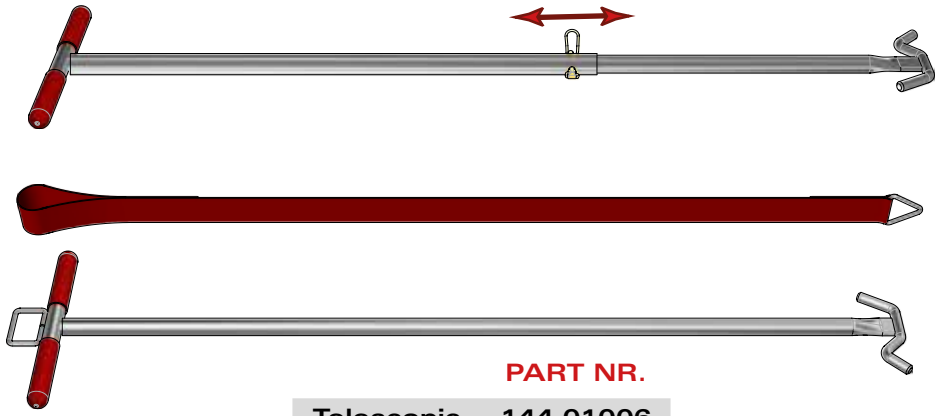

	PART NR.
Telescopic	144-01006
Webbing	144-01500
Standard	144-01003

Pillars

Please see chapter Penta slider systems.

5 Set mounting plates

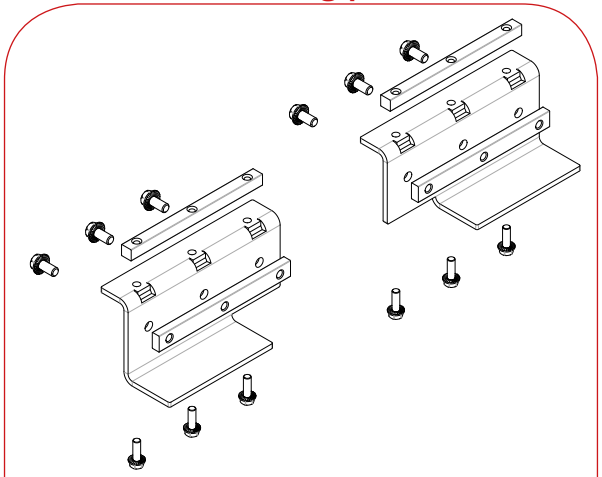

PART NR.

154-03101

* contains 2x the parts of the picture

Roller

Please see chapter Penta slider systems.

9 Carapax plate

PART NR.

291-03004

* only needed for roof with Carapax cover

Spare Parts

omega duo penta

For roof sticks

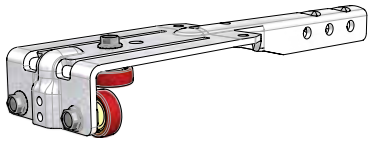

Assembled bracket

PART NR.

174-02001

Roller bearing plastic

PART NR.

132-01001

Bolt tensilock M6x16mm

PART NR.

091-23001

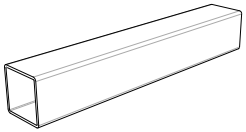

Tube30x30x1,5mm

	PART NR.
L = 2185mm	112-01003

For collapsible backside

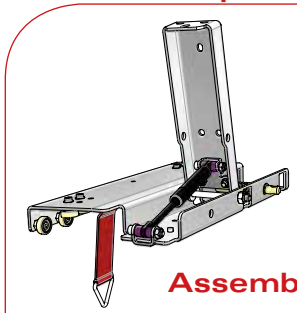

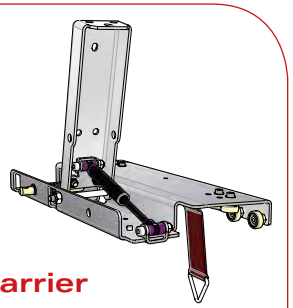

Assembled carrier

	PART NR.
Left	204-47201
Right	204-47202

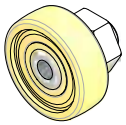

Roller bearing steel

PART NR.

132-03001

Bolt tensilock M6x16mm

PART NR.

091-23001

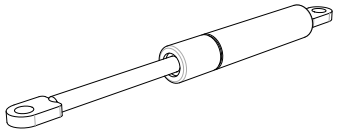

Gas spring 700N

PART NR.

302-01001

For accessories set

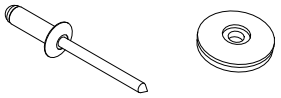

Rivet & washer

	PART NR.
50 pieces	144-10003

Rope clamp

PART NR.

292-01001

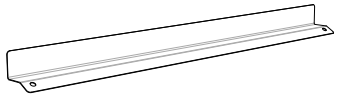

Protection plate

PART NR.

142-06006

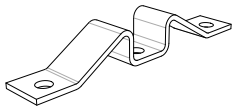

Locking nose

PART NR.

142-05002

Chain with 2 hooks

PART NR.

142-07001

For mounting set

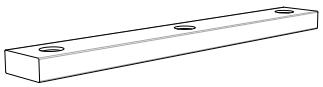

Mounting block

	PART NR.
14x14	152-02019
20x10	152-02006

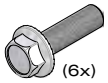

Bolt tensilock M10x20mm

PART NR.

091-23004

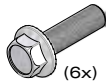

Bolt tensilock M8x25mm

PART NR.

091-23005

omega
plano

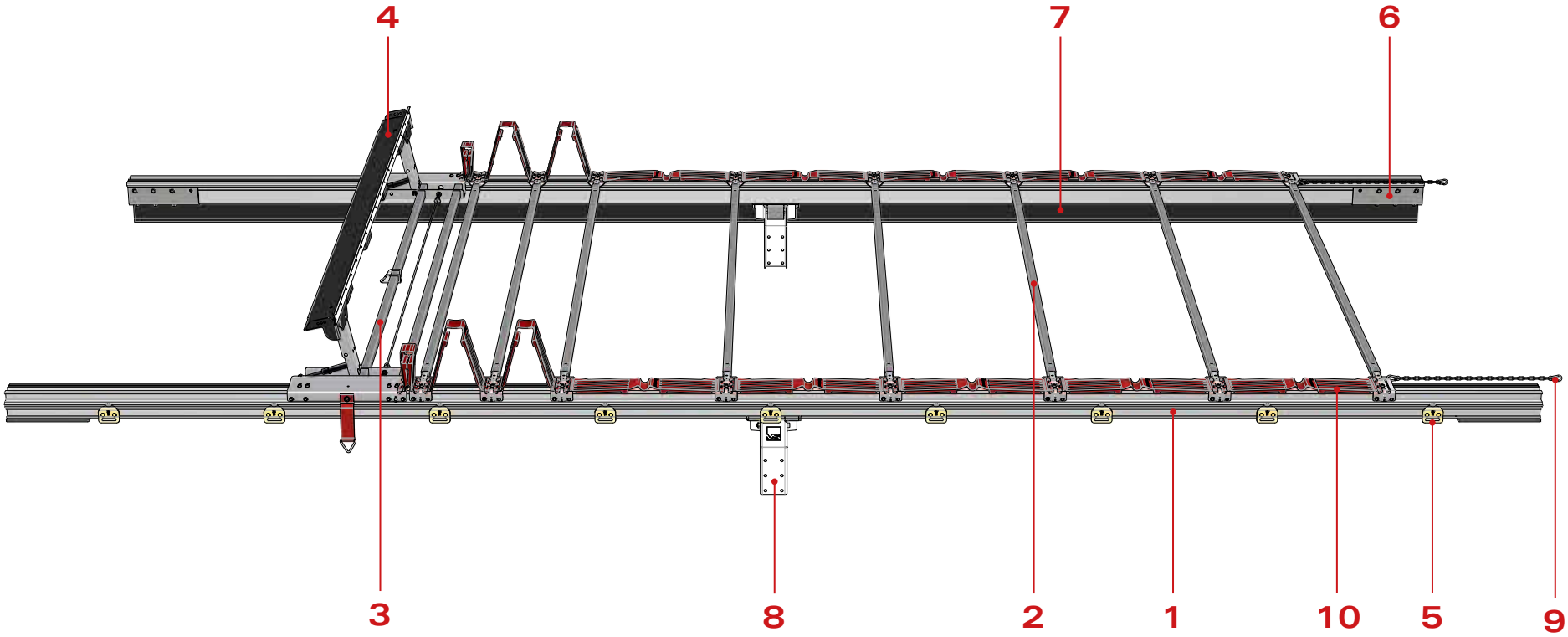

1	Plano rail	7	PVC pelmet
2	Roof stick	8	Pillar bracket
3	Collapsible backside	9	Set accessories
4	Back beam	10	Folding plate
5	Roller	11	Pull bar
6	Set mounting plates		

1 Plano rail

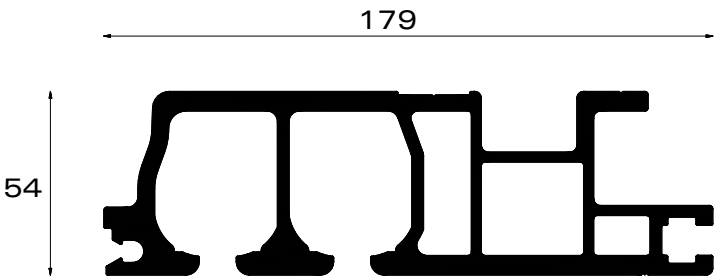

	PART NR.
* L = 7,5m	162-05750
* L = 8,5m	162-05850
* L = 9,5m	162-05950
* L = 13,6m	162-05136

*profile with pre-bending

Ix : 107cm^4
Iy : 739cm^4
± 7,5 kg/m

2a Roof stick for sliding roof

	PART NR.
SB=2550 - Type SP	224-01031
SB=2550 - Type AS (Al)	224-03031

2b Roof stick for fixed roof with tarpaulin cover

	PART NR.
SB=2550 - Type SP	224-01231
SB=2550 - Type AS (Al)	224-23231

* Roof stick fixed to rail with monobolts

3 Collapsible backside

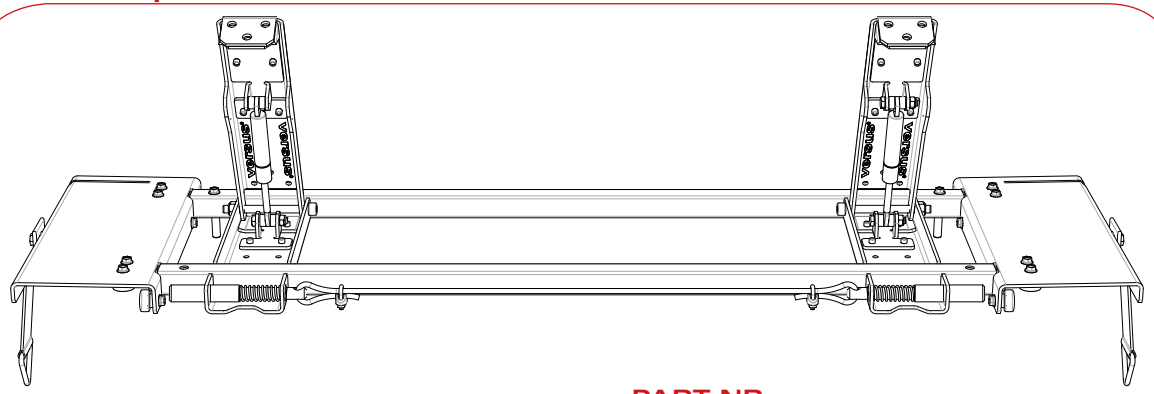

	PART NR.
SB=2550 - L=52	214-03031

9a Set accessories

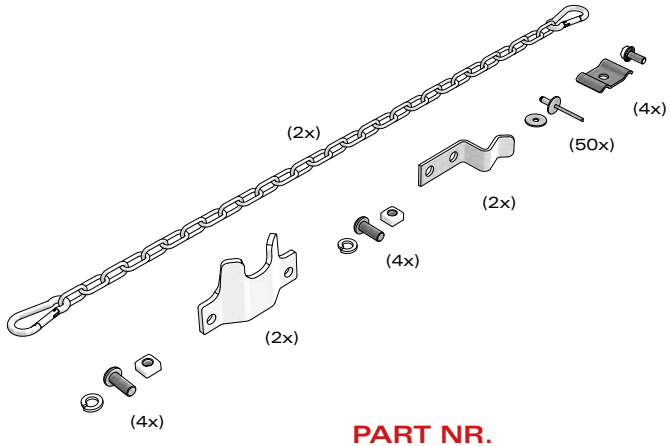

	PART NR.
Set	144-10023

9b Set lock collapsible backside

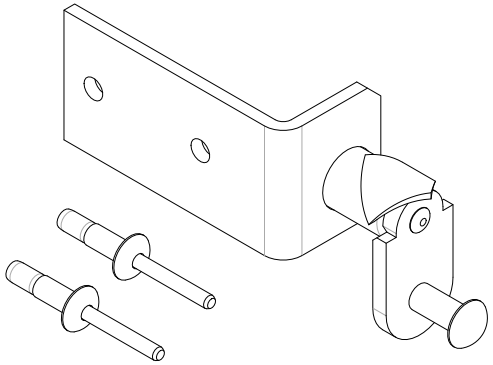

	PART NR.
Set left	144-10008
Set right	144-10009

4 Back beam

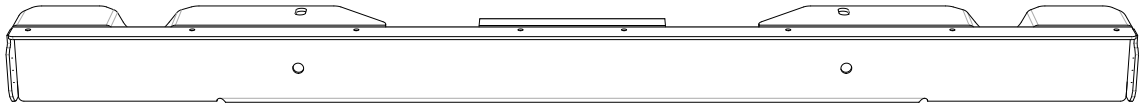

	PART NR.
SB=2550 - 80Z	193-05031
Mounting set	144-10022

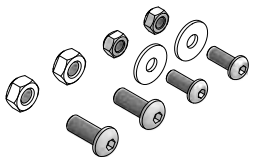

Rain strip for back beam (4)

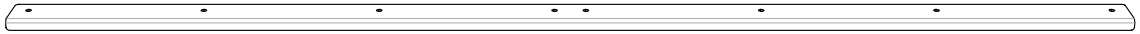

	PART NR.
SB=2550	192-01601

10 Folding plate

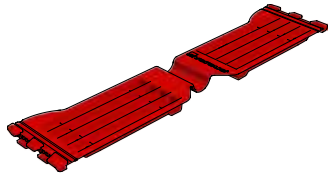

	PART NR.
Type 400	242-01004
Type 500	242-01005
Type 600	242-01006
Type 700	242-01007
Type 570	242-01057
Type 650	242-01065

7a PVC pelmet (black)

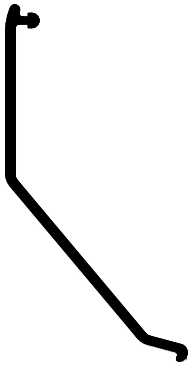

	PART NR.
L = 9m	242-12109
L = 14m	242-12114

* By sidecurtain roller 284-10002

7b PVC pelmet (black)

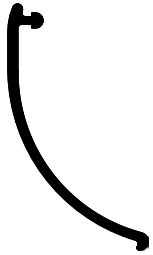

	PART NR.
L = 9m	242-15109
L = 14m	242-15114

* By sidecurtain roller 284-10007

11 Pull bars & webbing

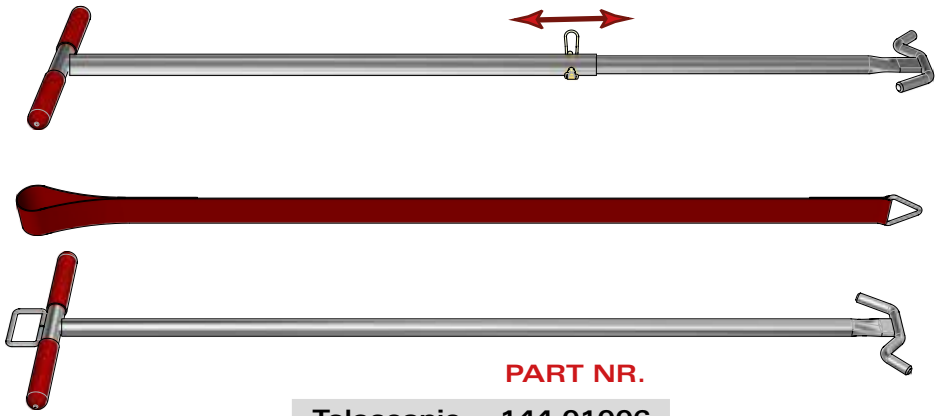

	PART NR.
Telescopic	144-01006
Webbing	144-01500
Standard	144-01003

8 Pillar bracket

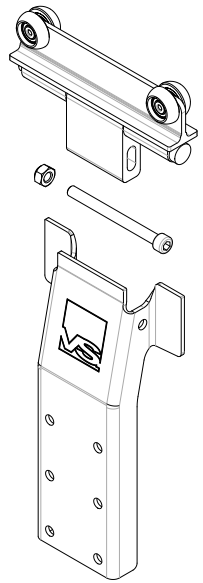

	PART NR.
Bracket	264-01002
Bolt & nut	144-10015
Plate	262-05007

6 Set mounting plates

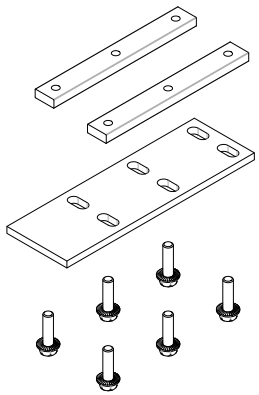

PART NR.

154-03001

* contains 4x the parts of the picture

5a Roller

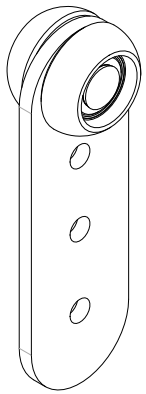

PART NR.

284-10002

5b Roller

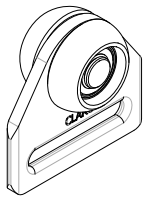

PART NR.

284-10007

Spare Parts

omega plano

For roof sticks

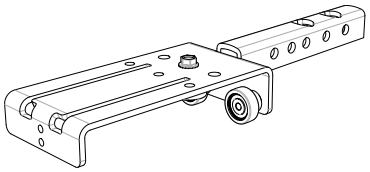

Assembled bracket

PART NR.

174-04031

Roller bearing plastic

PART NR.

132-01001

Bolt tensilock M6x16mm

PART NR.

091-23001

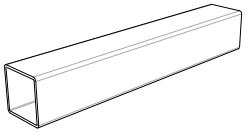

Tube30x30x1,5mm

	PART NR.
L = 2150mm	112-01003

For collapsible backside

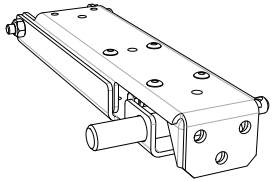

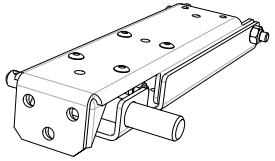

Assembled carrier

	PART NR.
Left	254-01032
Right	254-01035

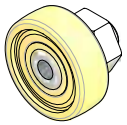

Roller bearing steel

PART NR.

132-03001

Bolt tensilock M6x16mm

PART NR.

091-23001

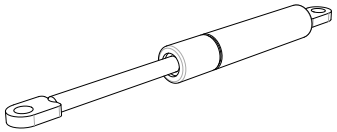

Gas spring 700N

PART NR.

302-01001

For accessories set

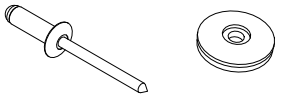

Rivet & washer

	PART NR.
50 pieces	144-10003

Rope clamp

PART NR.

292-01001

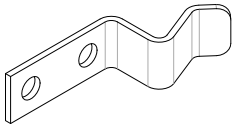

Locking nose front

PART NR.

142-05013

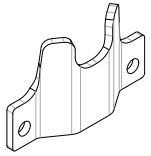

Locking nose back

PART NR.

142-05006

Chain with 2 hooks

PART NR.

142-07001

For mounting set

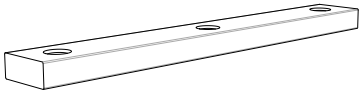

Mounting block

PART NR.

152-02001

Bolt tensilock M10x35mm

PART NR.

091-23002

omega
pico

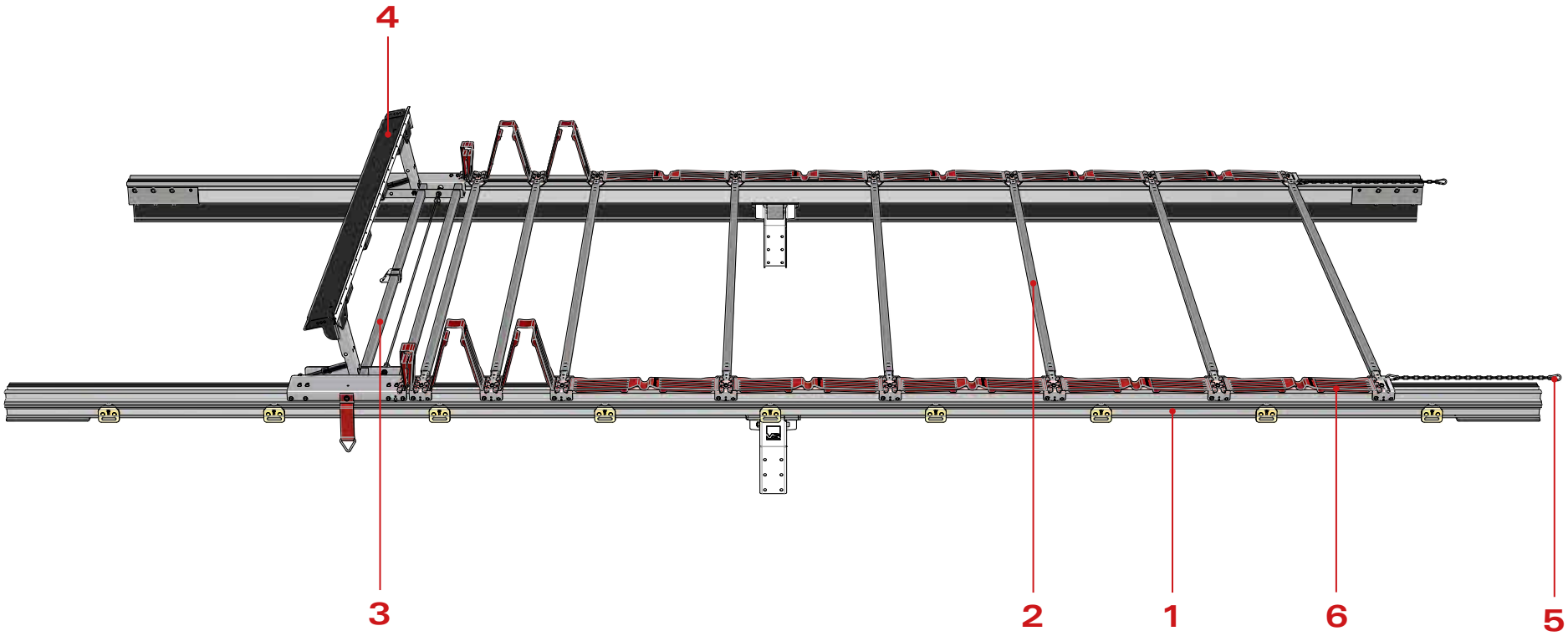

1	Pico rail	5	Set accessories
2	Roof stick	6	Folding plate
3	Collapsible backside	7	Mounting set roof stick fix
4	Back beam	8	Pull bar

1 Pico rail

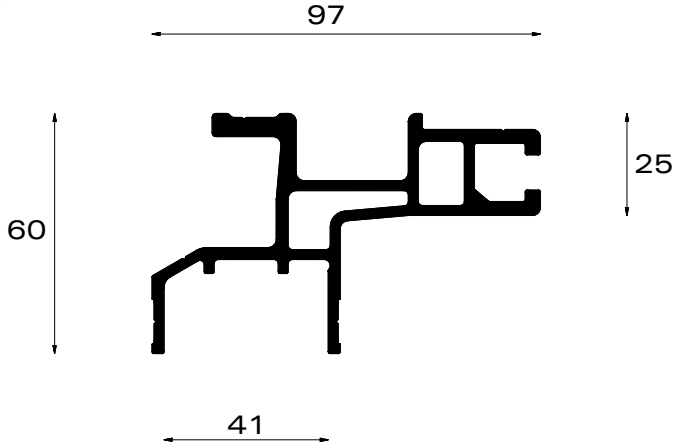

	PART NR.
L = 7m	162-08700

Ix : 21cm⁴
Iy : 67cm⁴
± 2,5 kg/m

2a Roof stick for sliding roof

	PART NR.
SB=2550 - Type SP	224-01001
SB=2550 - Type AS (Al)	224-03001

2b Roof stick for fixed roof with polyester cover

fix

	PART NR.
SB=2550 - Type SP	224-01101
SB=2550 - Type AS (Al)	224-03101
Mounting set roof stick fix	144-10048

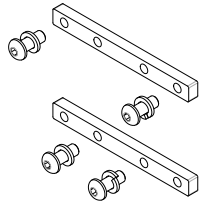

* Roof stick screwed to rail with bolts

* 1 set/roof stick

6 Folding plate

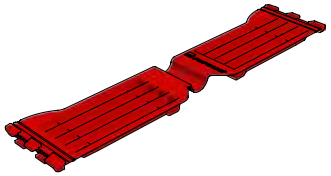

	PART NR.
Type 400	242-01004
Type 500	242-01005
Type 600	242-01006
Type 700	242-01007
Type 570	242-01057
Type 650	242-01065

2c Roof stick for fixed roof with tarpaulin cover

fix

	PART NR.
SB=2550 - Type SP	224-01211
SB=2550 - Type AS (Al)	224-03211
Mounting set roof stick fix	144-10048

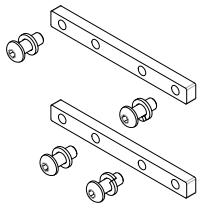

* Roof stick screwed to rail with bolts

* 1 set/roof stick

3 Collapsible backside

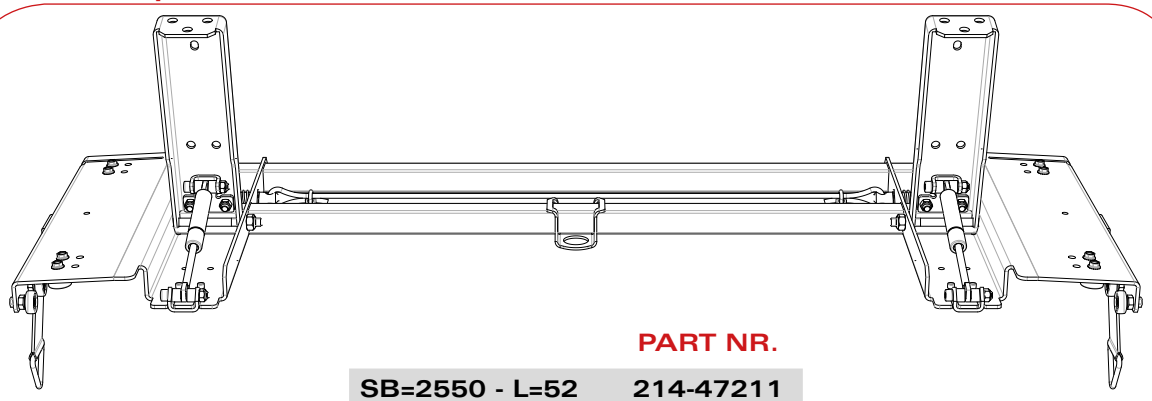

	PART NR.
SB=2550 - L=52	214-47211

5a Set accessories

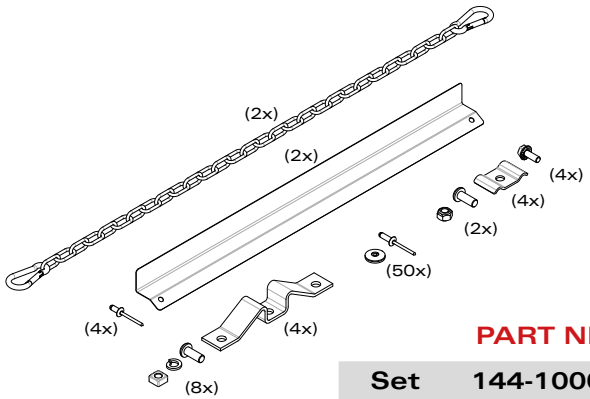

	PART NR.
Set	144-10001

4a Back beam

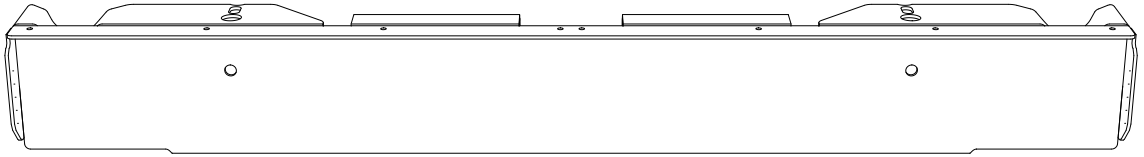

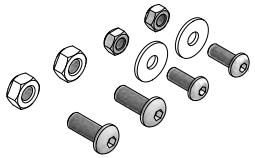

	PART NR.
SB=2550 - 125Z	193-11001
Mounting set	144-10022

5b Set lock collapsible backside

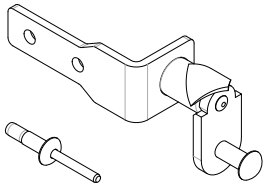

	PART NR.
Set	144-10086

5c Set accessories external unlocking

	PART NR.
Set	144-10174

4b Back beam

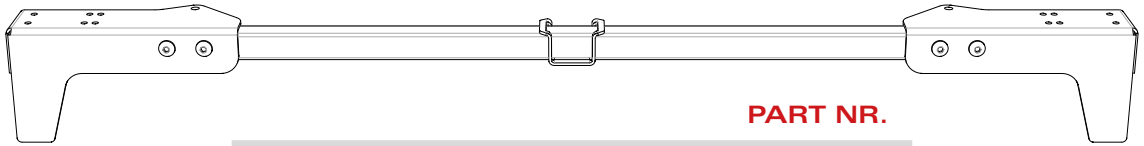

	PART NR.
Set back beam tube 30x30mm	144-10037
Tube 30x30x2mm	112-07001

8 Pull bars & webbing

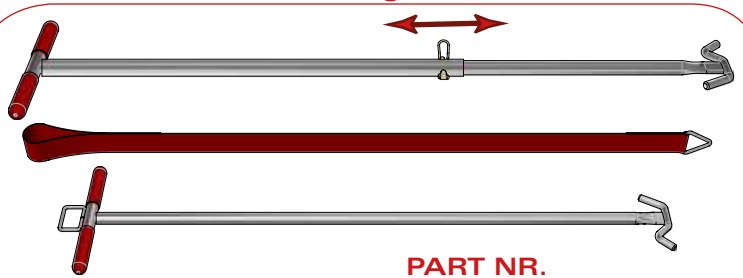

	PART NR.
Telescopic	144-01006
Webbing	144-01500
Standard	144-01003

Spare Parts

omega pico

For roof sticks

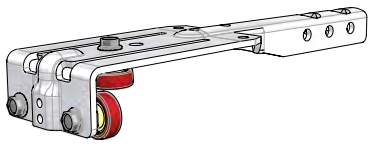

Assembled bracket

PART NR.

174-02001

Roller bearing plastic

PART NR.

132-01001

Bolt tensilock M6x16mm

PART NR.

091-23001

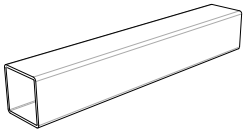

Tube30x30x1,5mm

	PART NR.
L = 2185mm	112-01003

For collapsible backside

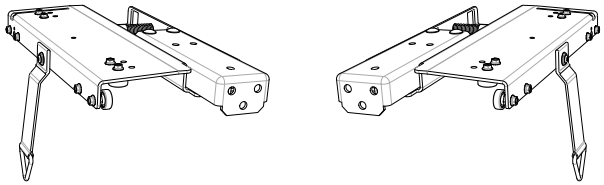

Assembled carrier

	PART NR.
Left	204-47211
Right	204-47212

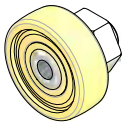

Roller bearing steel

PART NR.

132-03001

Bolt tensilock M6x16mm

PART NR.

091-23001

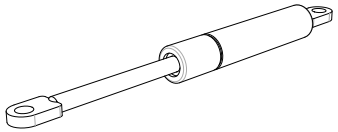

Gas spring 700N

PART NR.

302-01001

For accessories set

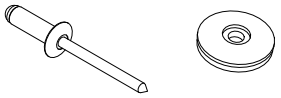

Rivet & washer

	PART NR.
50 pieces	144-10003

Rope clamp

PART NR.

292-01001

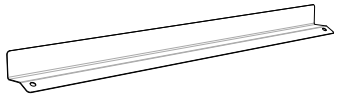

Protection plate

PART NR.

142-06006

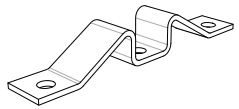

Locking nose

PART NR.

142-05002

Chain with 2 hooks

PART NR.

142-07001

omega
ferro

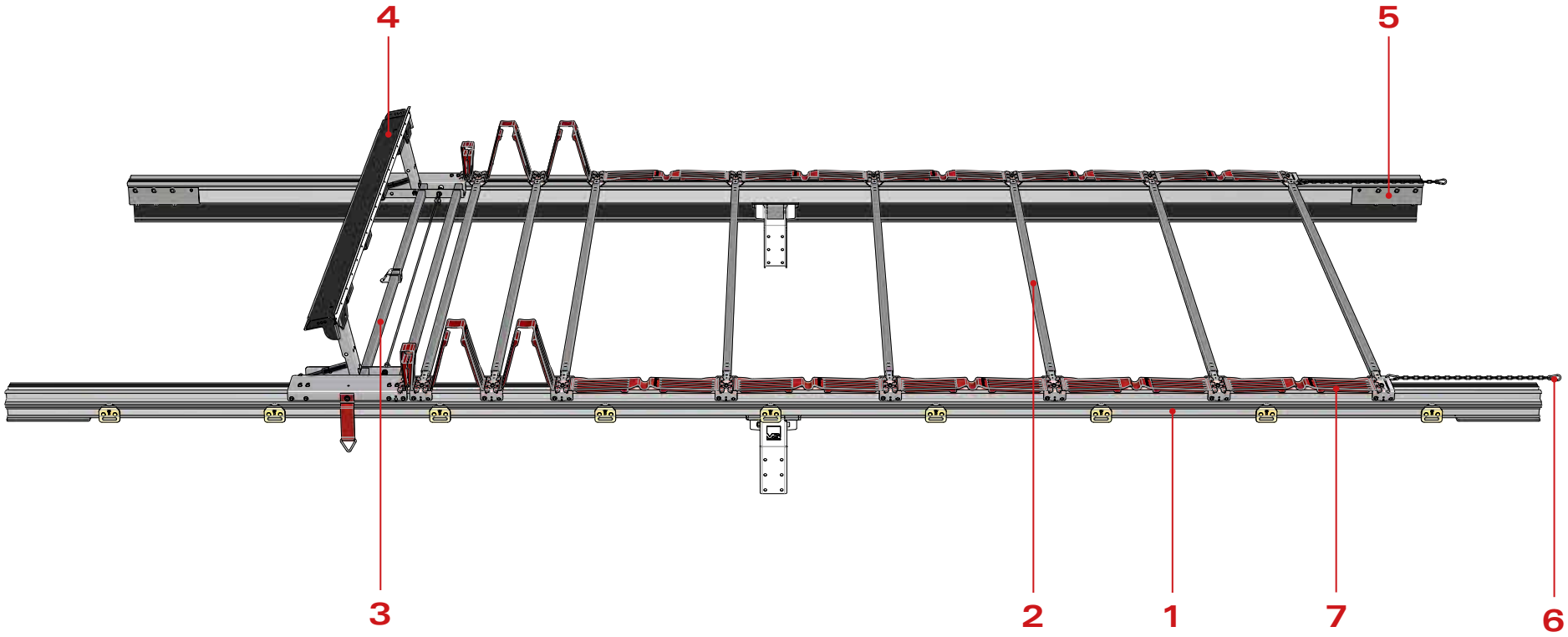

1	Ferro rail	5	Set mounting plates
2	Roof stick	6	Set accessories
3	Collapsible backside	7	Folding plate
4	Back beam	8	Pull bar

1 Ferro rail SS

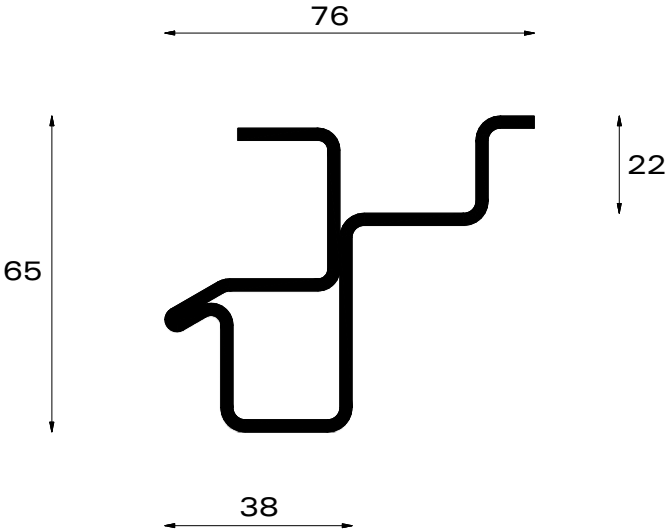

	PART NR.
L = 7m	162-09700

Ix : 22cm^4
Iy : 20cm^4
± 4,6 kg/m

2 Roof stick for sliding roof

	PART NR.
SB=2550 - Type SP	224-30001
SB=2550 - Type AS (Al)	224-33001

3 Collapsible backside

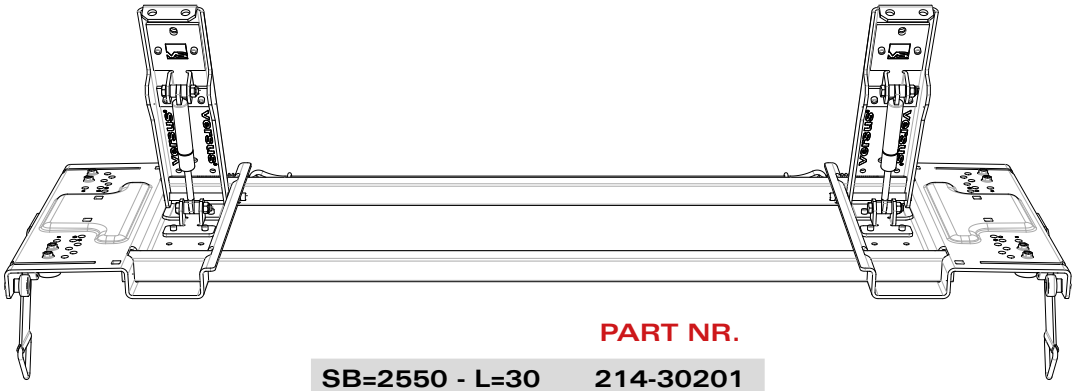

	PART NR.
SB=2550 - L=30	214-30201

4 Back beam

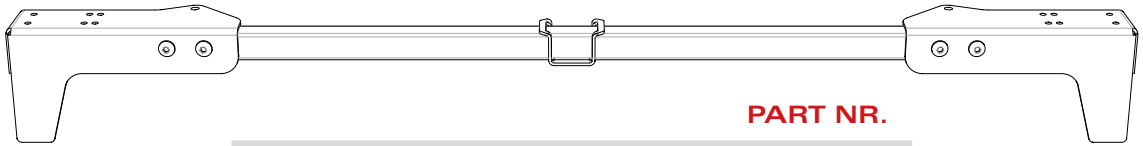

	PART NR.
Set back beam tube 30x30mm	144-10037
Tube 30x30x2mm	112-07001

6a Set accessories

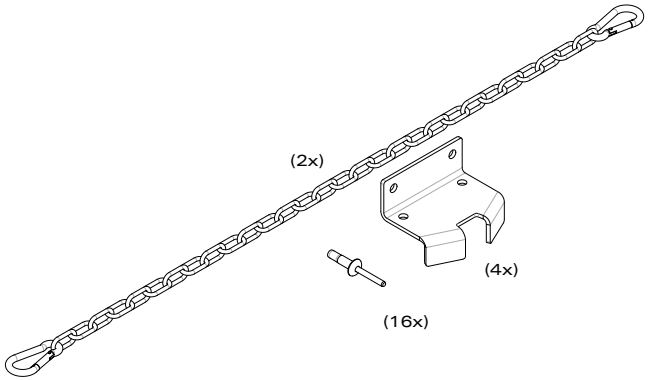

	PART NR.
Set	144-10034

6b Set lock collapsible backside

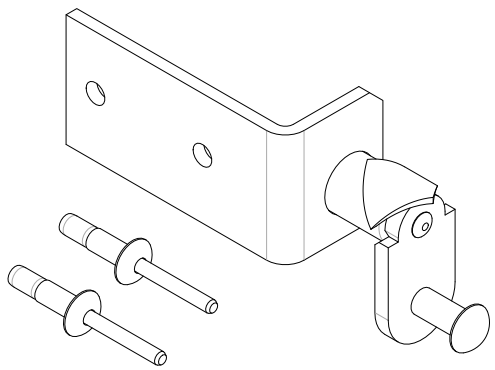

	PART NR.
Set left	144-10008
Set right	144-10009

7 Folding plate

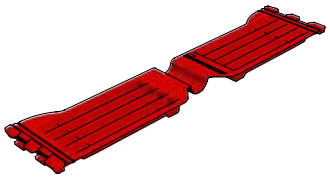

	PART NR.
Type 400	242-01004
Type 500	242-01005
Type 600	242-01006
Type 700	242-01007
Type 570	242-01057
Type 650	242-01065

Connection sets

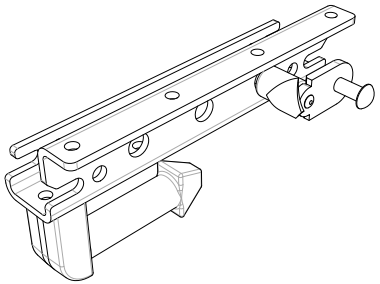

PART NR.

Left	153-30001

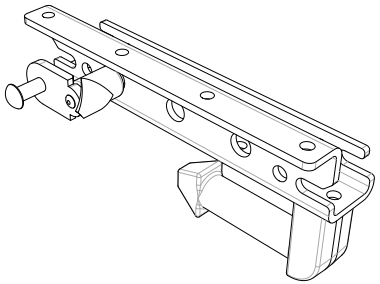

PART NR.

Right	153-30002

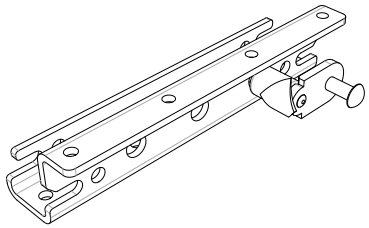

PART NR.

Left	153-30008

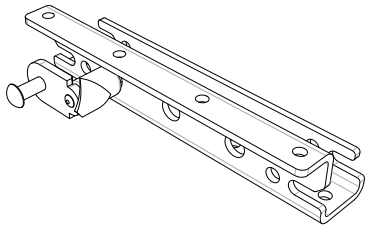

PART NR.

Right	153-30009

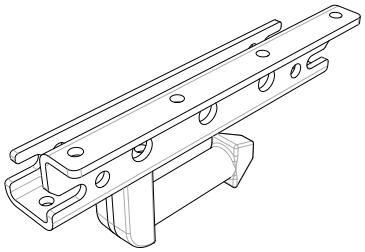

PART NR.

Left	153-30008

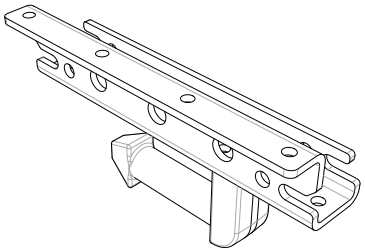

PART NR.

Right	153-30009

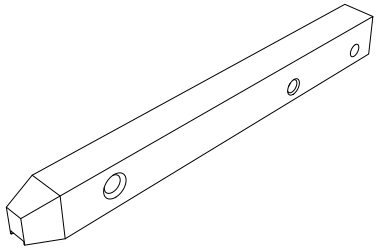

PART NR.

Pin	152-30003

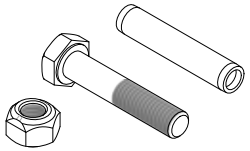

PART NR.

Set	144-10059

Support

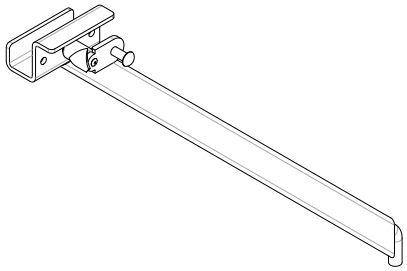

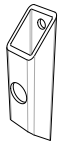

PART NR.

Left	153-05001
Right	153-05002

PART NR.

152-05001

Stabilizing bar

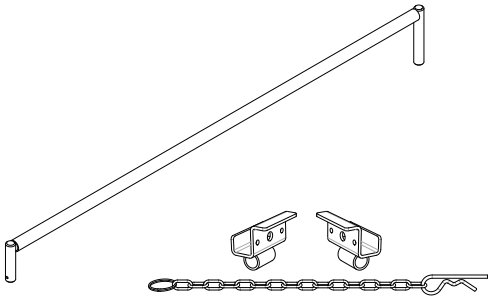

PART NR.

Bar 2550	153-04001
Set	144-10050

Pillar adapter

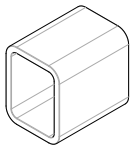

PART NR.

262-30001

8 Pull bars & webbing

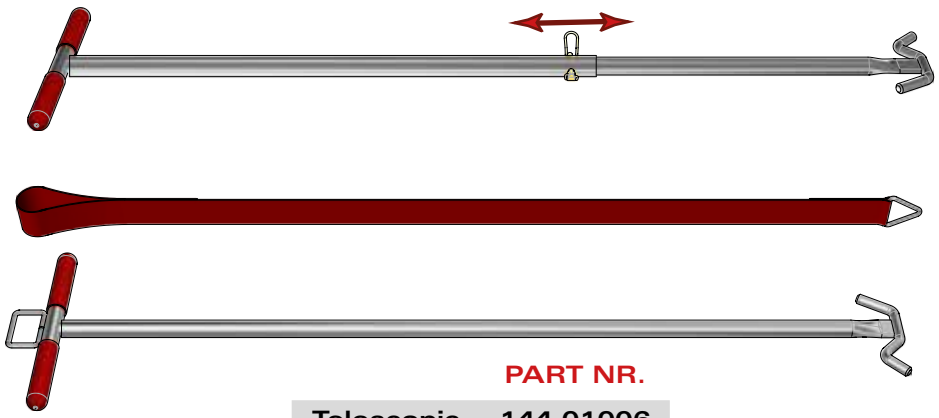

	PART NR.
Telescopic	144-01006
Webbing	144-01500
Standard	144-01003

5a Set mounting plates front

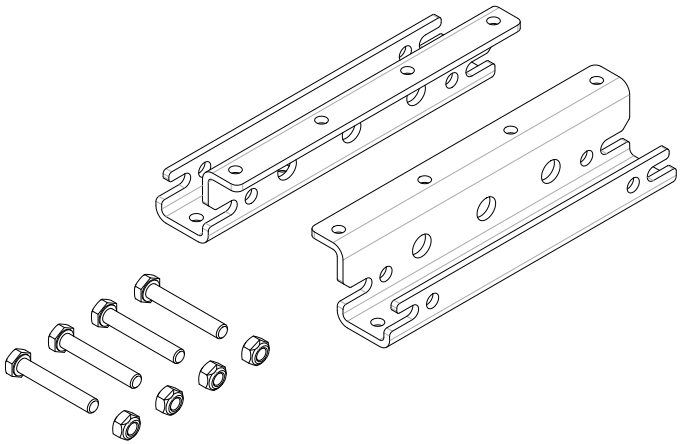

PART NR.

144-10036

5b Set mounting plates rear

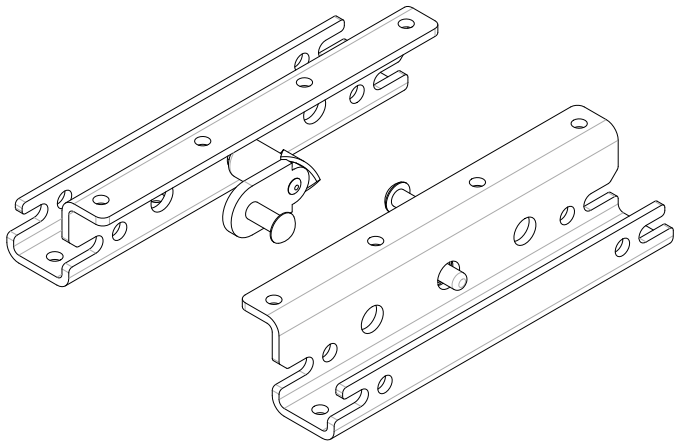

PART NR.

153-30005

Spare Parts

omega ferro

For roof sticks

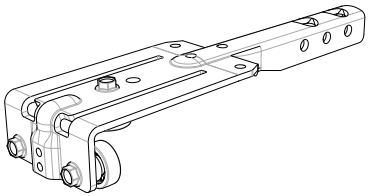

Assembled bracket

PART NR.

174-30001

Roller bearing plastic

PART NR.

132-01001

Bolt tensilock M6x16mm

PART NR.

091-23001

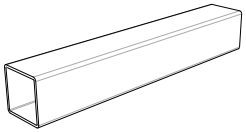

Tube30x30x1,5mm

	PART NR.
L = 2185mm	112-01003

For collapsible backside

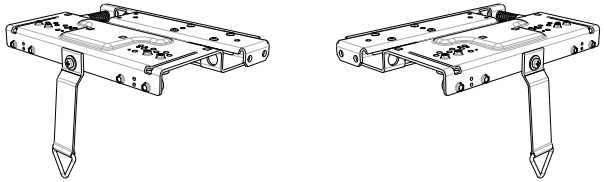

Assembled carrier

	PART NR.
Left	204-30201
Right	204-30202

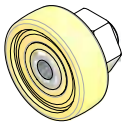

Roller bearing steel

PART NR.

132-03001

Bolt tensilock M6x16mm

PART NR.

091-23001

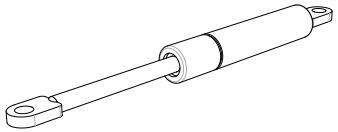

Gas spring 700N

PART NR.

302-01001

For accessories set

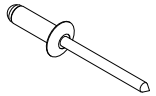

Rivet

PART NR.

091-01001

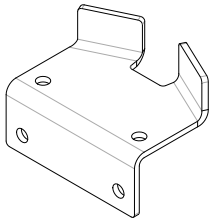

Locking nose

PART NR.

142-05011

Chain with 2 hooks

PART NR.

142-07001

omega
euro

TIR

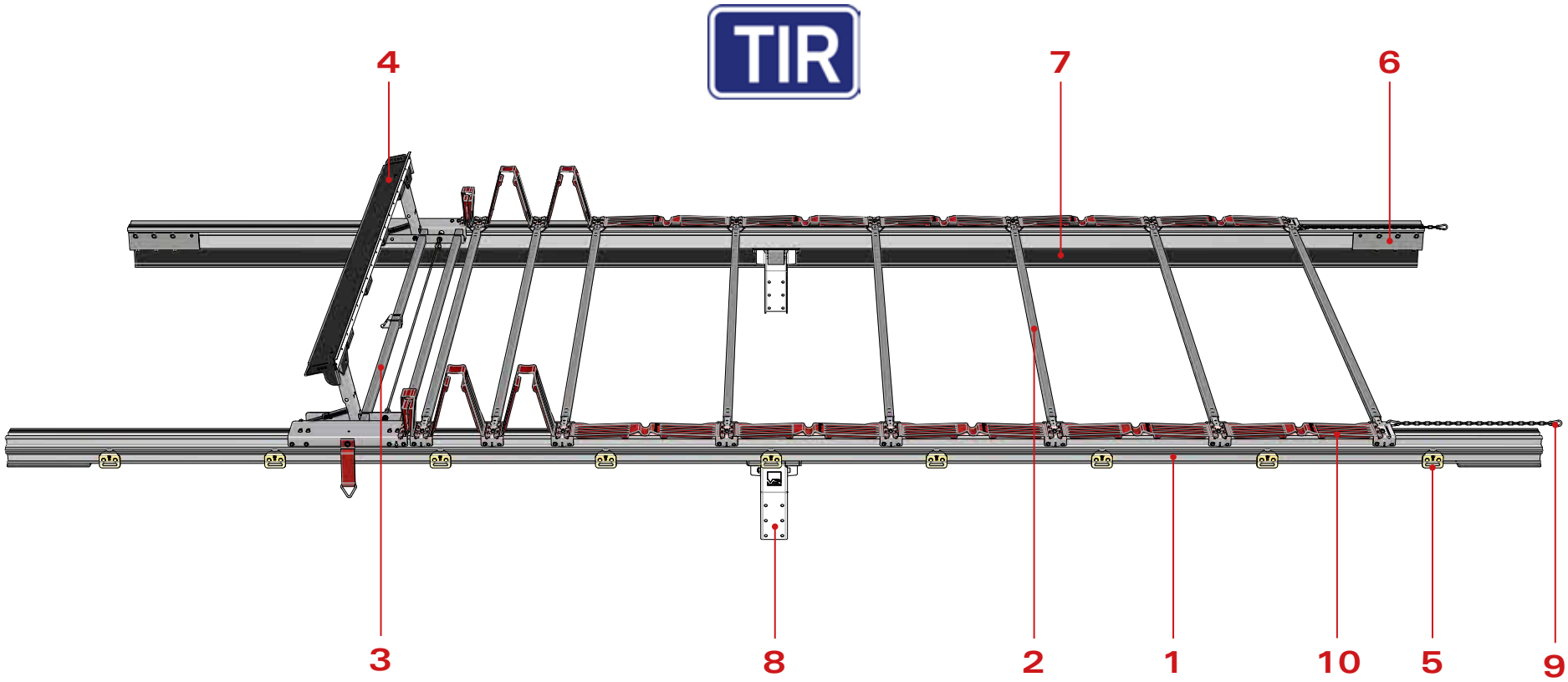

1	Euro rail	7	PVC pelmet
2	Roof stick	8	Pillar bracket
3	Collapsible backside	9	Set accessories
4	Back beam	10	Folding plate
5	Roller	11	Carapax plate
6	Set mounting plates	12	Pull bar

1 Euro rail

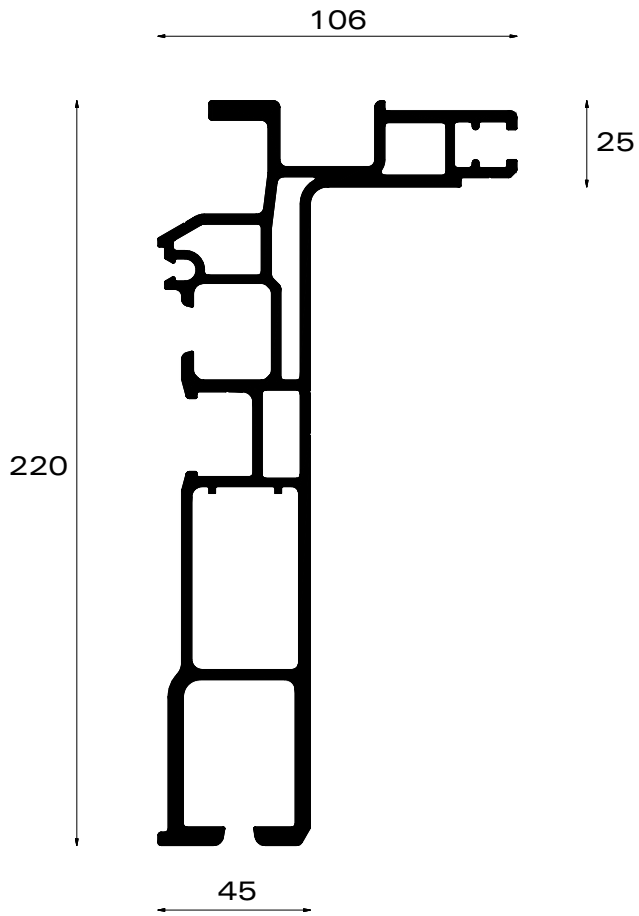

	PART NR.
L = 8,5m	162-21850
* L = 13,6m	162-21136

*profile with pre-bending

Ix : 1428cm^4
Iy : 167cm^4
± 7,5 kg/m

2a Roof stick for sliding roof

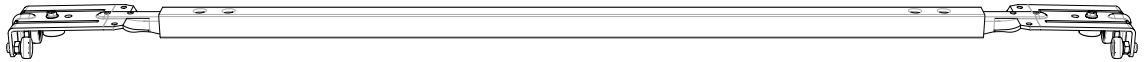

	PART NR.
SB=2550 - Type SP	224-01001
SB=2550 - Type AS (Al)	224-03001
SB=2550 - Type SP (TIR)	224-70001
SB=2550 - Type AS (Al) (TIR)	224-73001

TIR

2b Roof stick for fixed roof with polyester cover

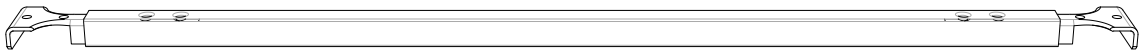

	PART NR.
SB=2550 - Type SP	224-21101
SB=2550 - Type AS (Al)	224-23101
Mounting set roof stick fix	144-10048

TIR + fix

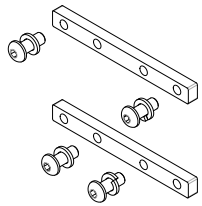

* Roof stick screwed to rail with bolts

* 1 set/roof stick

2c Roof stick for fixed roof with tarpaulin cover

	PART NR.
SB=2550 - Type SP	224-21211
SB=2550 - Type AS (Al)	224-23211
SB=2550 - Type SP (TIR)	224-70211
SB=2550 - Type AS (Al) (TIR)	224-73211
Mounting set roof stick fix	144-10048

fix

TIR + fix

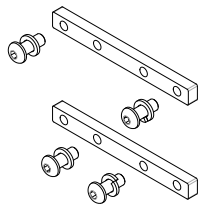

* Roof stick screwed to rail with bolts

* 1 set/roof stick

3a Collapsible backside

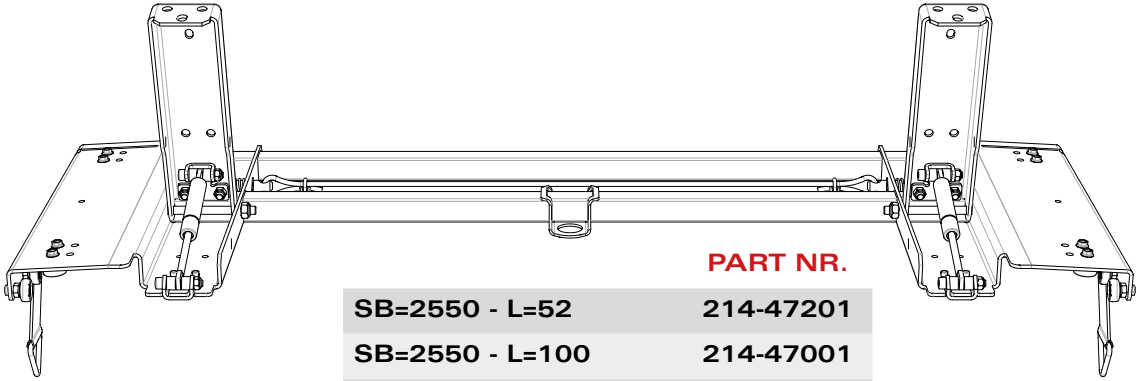

TIR

	PART NR.
SB=2550 - L=52	214-47201
SB=2550 - L=100	214-47001
SB=2550 - L=52 (TIR)	214-77201
SB=2550 - L=100 (TIR)	214-77001

3b Collapsible backside for fixed roof with tarpaulin cover

fix

	PART NR.
SB=2550 - L=100	324-47001

Front header

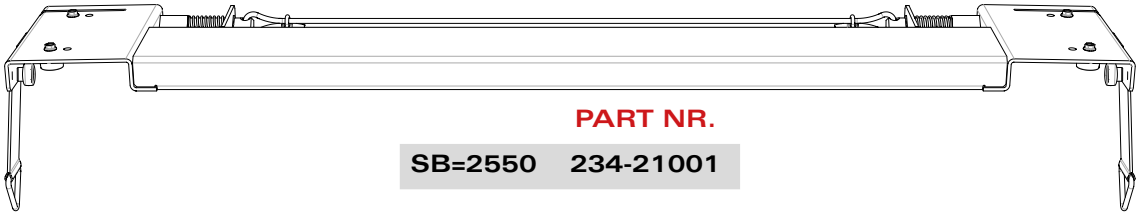

	PART NR.
SB=2550	234-21001

9a Set accessories

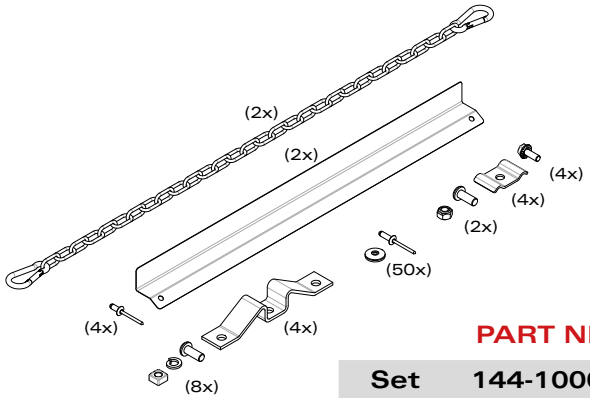

	PART NR.
Set	144-10001

9b Set accessories Twin

twin

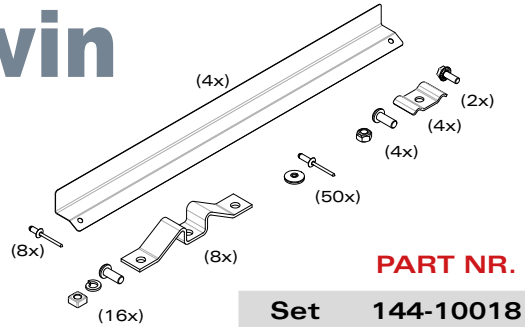

	PART NR.
Set	144-10018

* Euro Twin sliding roof: this set replaces the basic set accessories (144-10001)!

9c Set lock collapsible backside

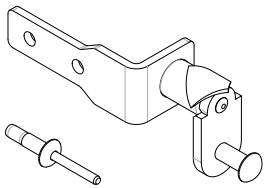

	PART NR.
Set	144-10086

9d Set accessories external unlocking

	PART NR.
Set	144-10174

4a Back beam

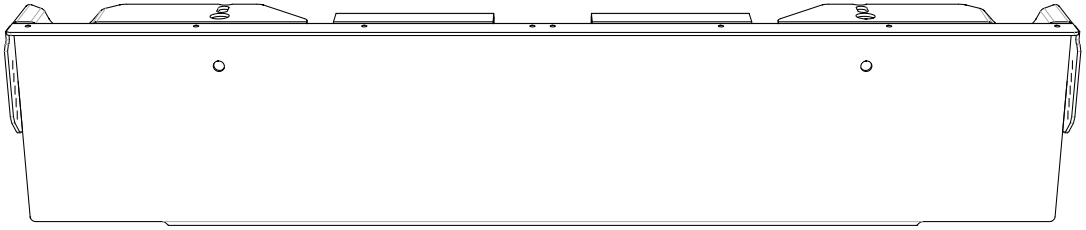

	PART NR.
SB=2550 - 208Z	193-18001
Mounting set	144-10022

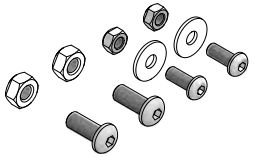

10 Folding plate

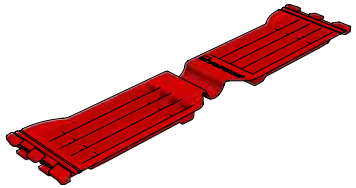

	PART NR.
Type 400	242-01004
Type 500	242-01005
Type 600	242-01006
Type 700	242-01007
Type 570	242-01057
Type 650	242-01065

Rain strip for back beam (4a)

	PART NR.
SB=2550	192-01601

7 PVC pelmet (black)

	PART NR.
L = 9m	242-13109
L = 14m	242-13114

Rain strip for front header

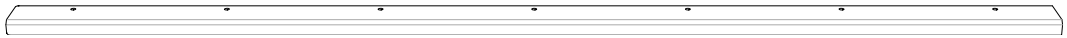

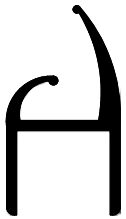

ttwin

	PART NR.
Rain strip SB=2550	192-01606
PVC pelmet L = 2,6m (black)	242-20001
Mounting strip 30x5mm L = 2,6m	292-07001

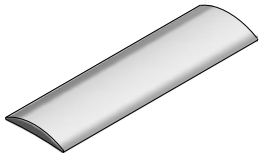

12 Pull bars & webbing

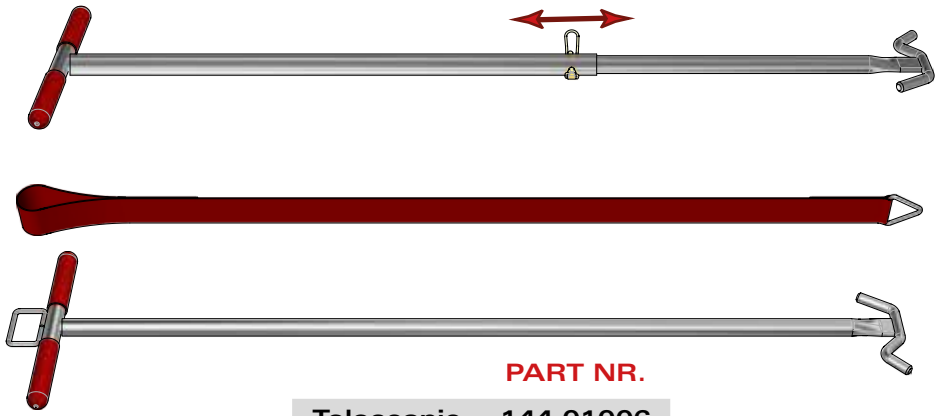

	PART NR.
Telescopic	144-01006
Webbing	144-01500
Standard	144-01003

6 Set mounting plates

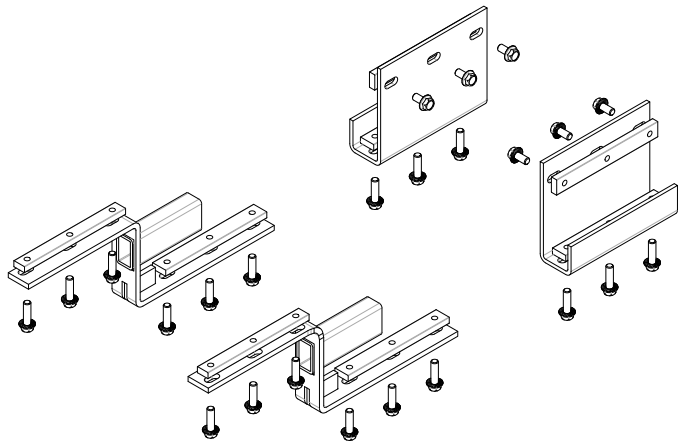

PART NR.

154-03009

5 Sidecurtain roller

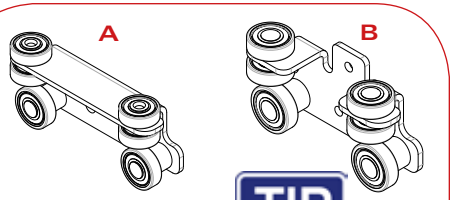

TIR

PART NR.

A Standard	284-10001
B TIR	284-10022

TIR - set

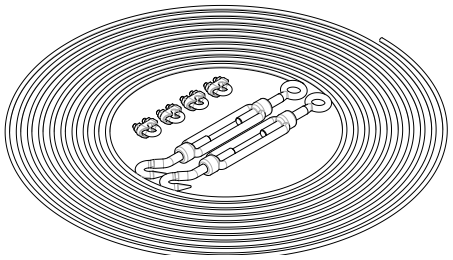

TIR

PART NR.

144-10099

TIR - pin & shell

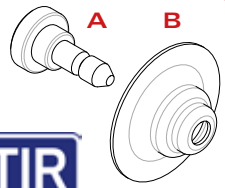

TIR

* 2 / roof stick

PART NR.

A	292-70002
B	292-70007

8 Pillar bracket

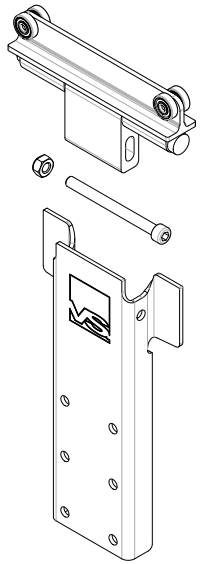

PART NR.

Bracket	264-01001
Bolt & nut	144-10015
Plate	262-05006

11 Carapax plate

PART NR.

291-03004

* only needed for roof with Carapax cover

Spare Parts

omega euro

For roof sticks

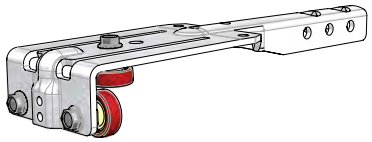

Assembled bracket

PART NR.

174-02001

Roller bearing plastic

PART NR.

132-01001

Bolt tensilock M6x16mm

PART NR.

091-23001

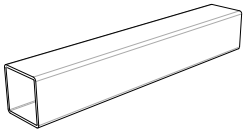

Tube30x30x1,5mm

	PART NR.
L = 2185mm	112-01003

For collapsible backside

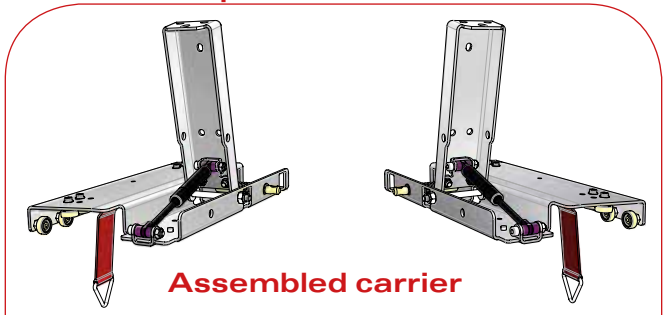

Assembled carrier

	PART NR.
Left	204-47201
Right	204-47202

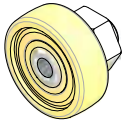

Roller bearing steel

PART NR.

132-03001

Bolt tensilock M6x16mm

PART NR.

091-23001

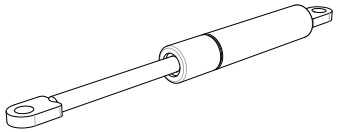

Gas spring 700N

PART NR.

302-01001

For accessories set

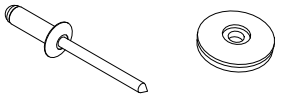

Rivet & washer

	PART NR.
50 pieces	144-10003

Rope clamp

PART NR.

292-01001

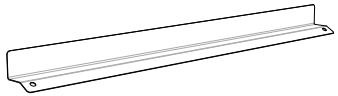

Protection plate

PART NR.

142-06006

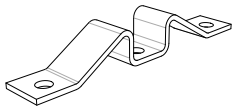

Locking nose

PART NR.

142-05002

Chain with 2 hooks

PART NR.

142-07001

For mounting set

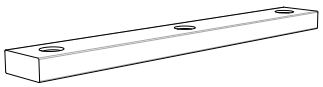

Mounting block

	PART NR.
25x10	152-02001
20x10	152-02006

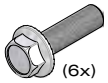

Bolt tensilock M10x20mm

PART NR.

091-23004

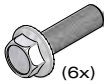

Bolt tensilock M10x35mm

PART NR.

091-23002

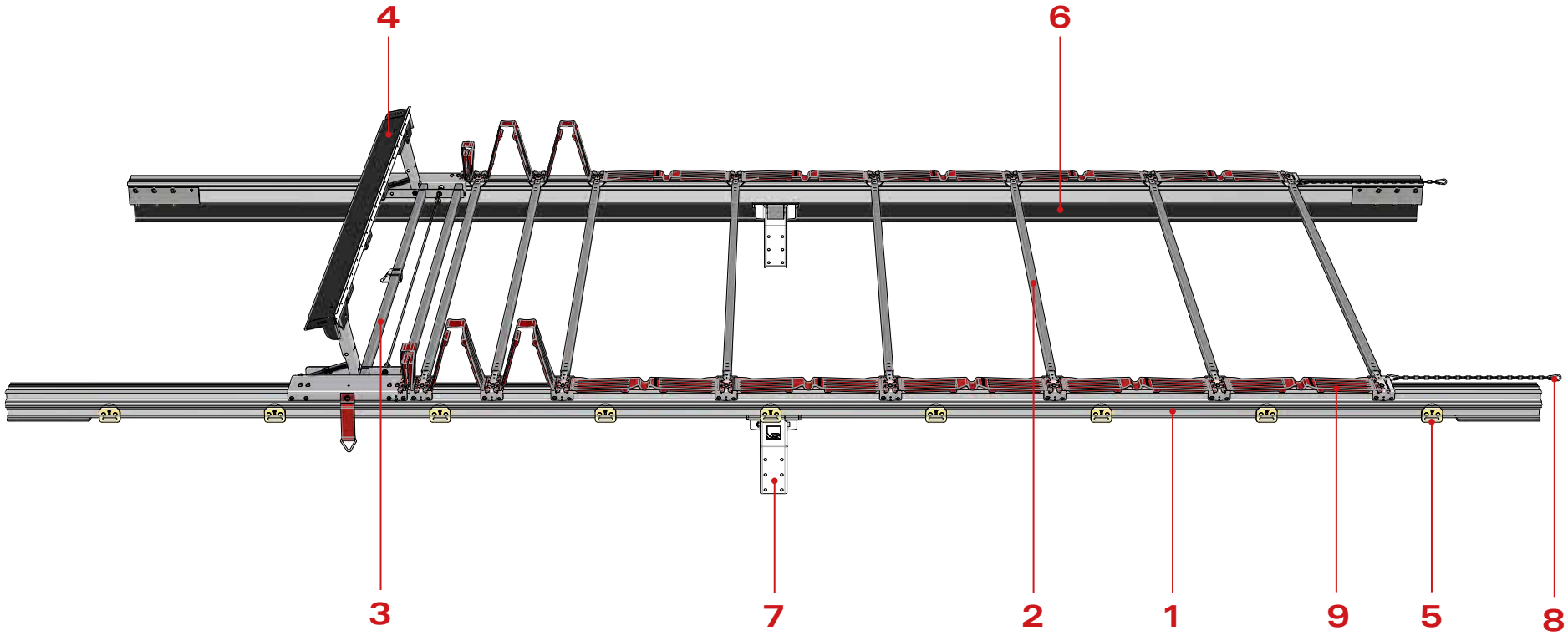

1	Solo rails	7	Pillar bracket
2	Roof stick	8	Set accessories
3	Collapsible backside	9	Folding plate
4	Back beam	10	Carapax plate
5	Trike roller	11	Pull bar
6	PVC pelmet		

1 Solo rails

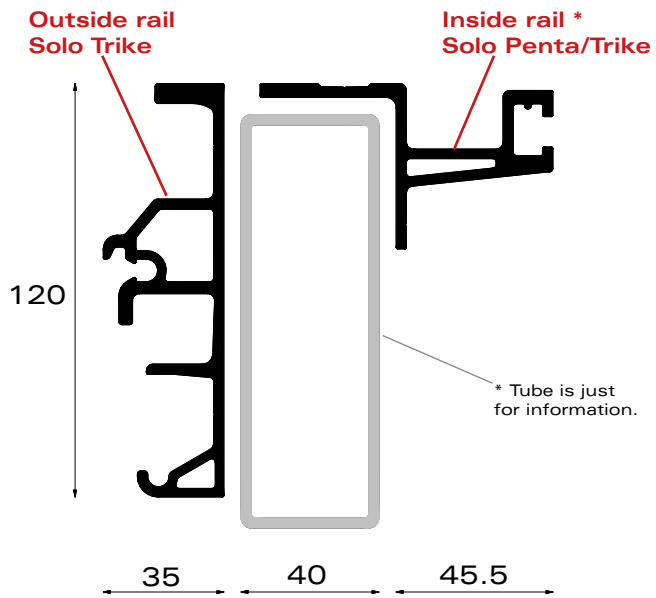

	PART NR.
Rail (out) L = 7,8m	162-42780
Rail (out) L = 8,5m	162-42850
Rail (in) L = 7,8m	162-43780
Rail (in) L = 8,5m	162-43850

Outside rail Solo Trike	Inside rail Solo
Ix : 119cm^4 Iy : 9cm^4 ± 2,5 kg/m	Ix : 9cm^4 Iy : 33cm^4 ± 1,8 kg/m

* Inside rail serves for Solo Penta and Solo Trike

2a Roof stick for sliding roof

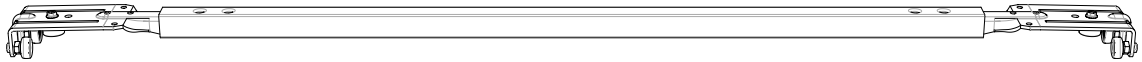

	PART NR.
SB=2550 - Type SP	224-39001
SB=2550 - Type AS (Al)	224-39021

2b Roof stick for fixed roof with polyester cover

	PART NR.
SB=2550 - Type SP	224-39101
SB=2550 - Type AS (Al)	224-39121
Mounting set roof stick fix	144-10049

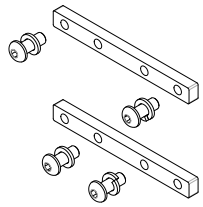

* Roof stick screwed to rail with bolts

* 1 set/roof stick

2c Roof stick for fixed roof with tarpaulin cover

	PART NR.
SB=2550 - Type SP	224-39201
SB=2550 - Type AS (Al)	224-39221
Mounting set roof stick fix	144-10049

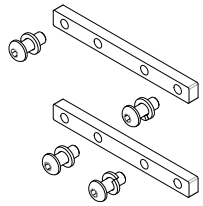

* Roof stick screwed to rail with bolts

* 1 set/roof stick

3a Collapsible backside

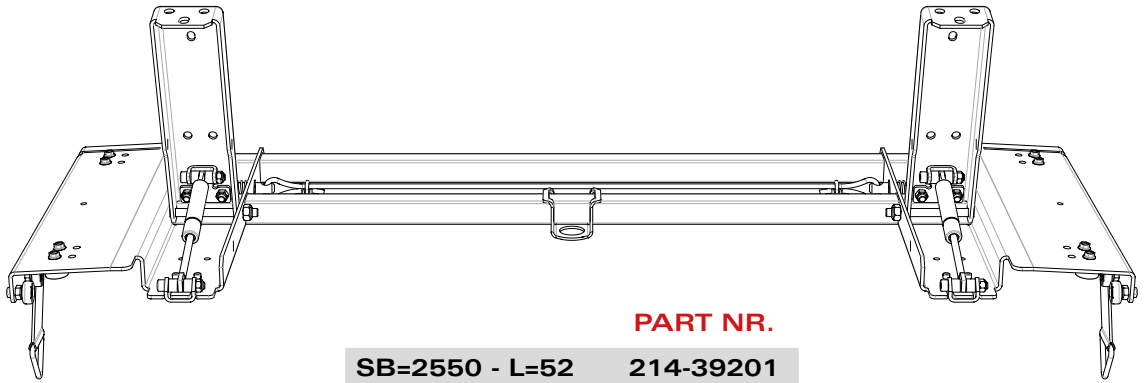

	PART NR.
SB=2550 - L=52	214-39201

9a Set accessories

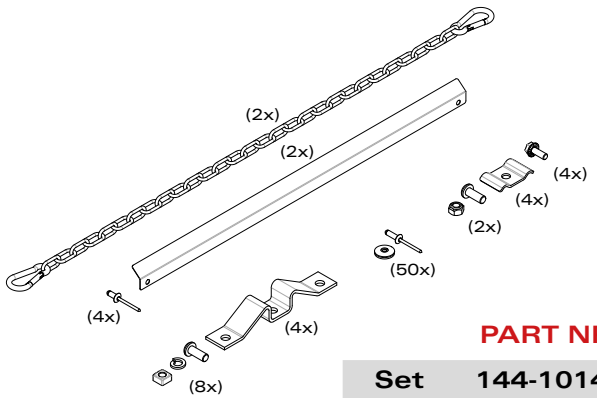

	PART NR.
Set	144-10148

3b Collapsible backside for fixed roof with tarpaulin cover

	PART NR.
SB=2550 - L=100	324-39201

9b Set accessories Twin

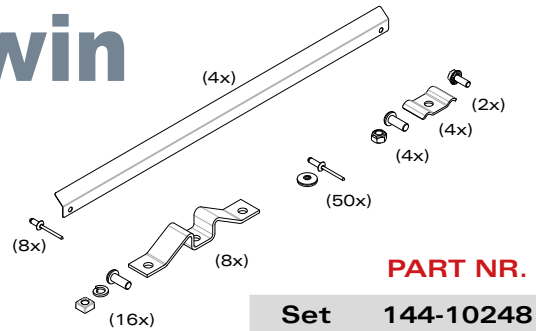

	PART NR.
Set	144-10248

* Solo Trike Twin sliding roof: this set replaces the basic set accessories (144-10001)!

Front header

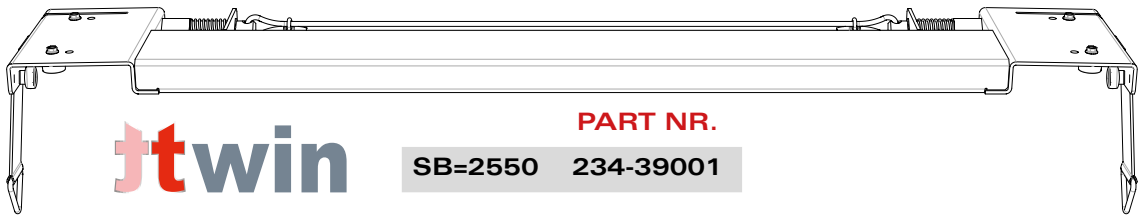

	PART NR.
SB=2550	234-39001

9c Set lock collapsible backside

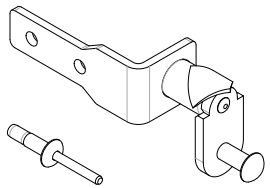

	PART NR.
Set	144-10086

9d Set accessories external unlocking

	PART NR.
Set	144-10174

4a Back beam

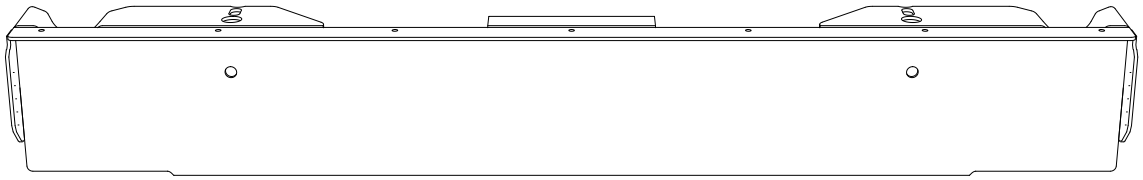

	PART NR.
SB=2550 - 145Z	193-39001
Mounting set	144-10022

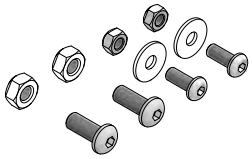

4b Back beam

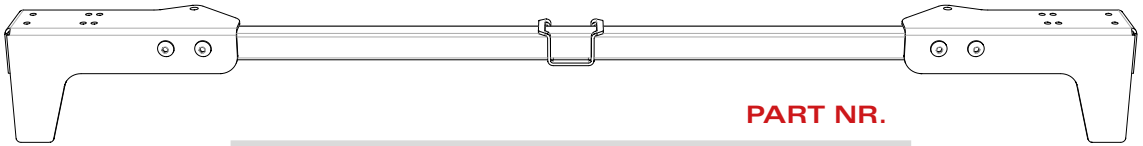

	PART NR.
Set back beam tube 30x30mm	144-10037
Tube 30x30x2mm	112-39001

Rain strip for back beam (4a)

	PART NR.
SB=2550	192-01601

Rain strip for front header

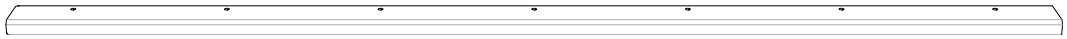

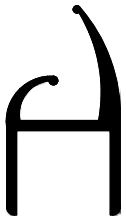

ttwin

	PART NR.
Rain strip SB=2550	192-01606
PVC pelmet L = 2,6m (black)	242-20001
Mounting strip 30x5mm L = 2,6m	292-07001

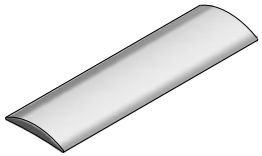

9 Folding plate

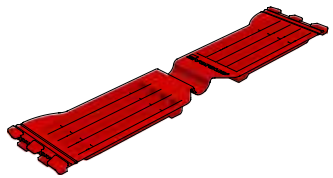

	PART NR.
Type 400	242-01004
Type 500	242-01005
Type 600	242-01006
Type 700	242-01007
Type 570	242-01057
Type 650	242-01065

6 PVC pelmet (black)

	PART NR.
L = 9m	242-14109
L = 14m	242-14114

11 Pull bars & webbing

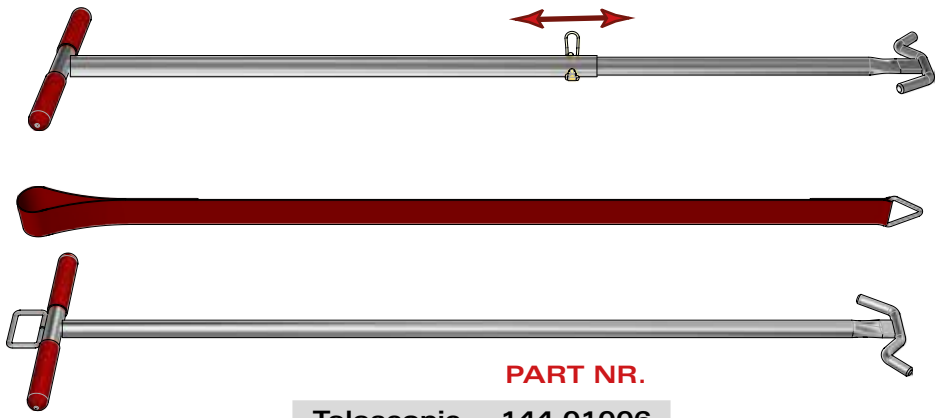

	PART NR.
Telescopic	144-01006
Webbing	144-01500
Standard	144-01003

7 Pillar bracket

* Not provided by VS.

5 Trike roller

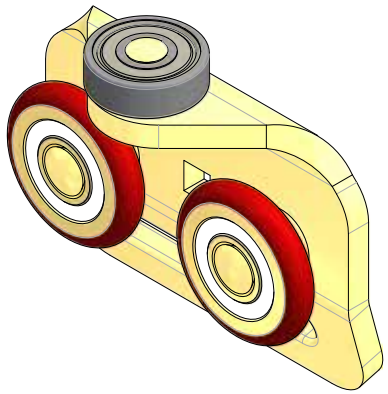

PART NR.

284-10024

10 Carapax plate

PART NR.

291-03004

* only needed for roof with Carapax cover

Spare Parts

omega solo trike

For roof sticks

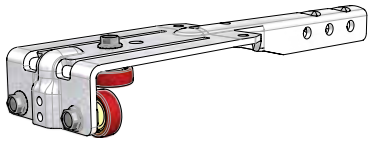

Assembled bracket

PART NR.

174-39001

Roller bearing plastic

PART NR.

132-01001

Bolt tensilock M6x16mm

PART NR.

091-23001

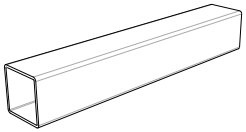

Tube30x30x1,5mm

	PART NR.
L = 2185mm	112-01003

For collapsible backside

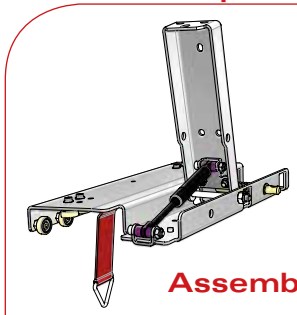

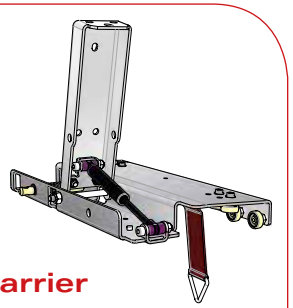

Assembled carrier

	PART NR.
Left	204-39201
Right	204-39202

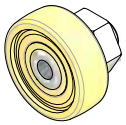

Roller bearing steel

PART NR.

132-03001

Bolt tensilock M6x16mm

PART NR.

091-23001

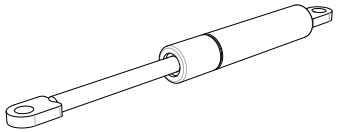

Gas spring 700N

PART NR.

302-01001

For accessories set

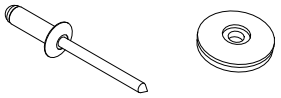

Rivet & washer

	PART NR.
50 pieces	144-10003

Rope clamp

PART NR.

292-01001

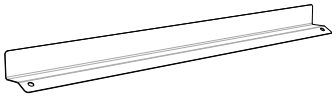

Protection plate

PART NR.

142-06006

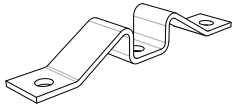

Locking nose

PART NR.

142-05002

Chain with 2 hooks

PART NR.

142-07001

omega
solo penta

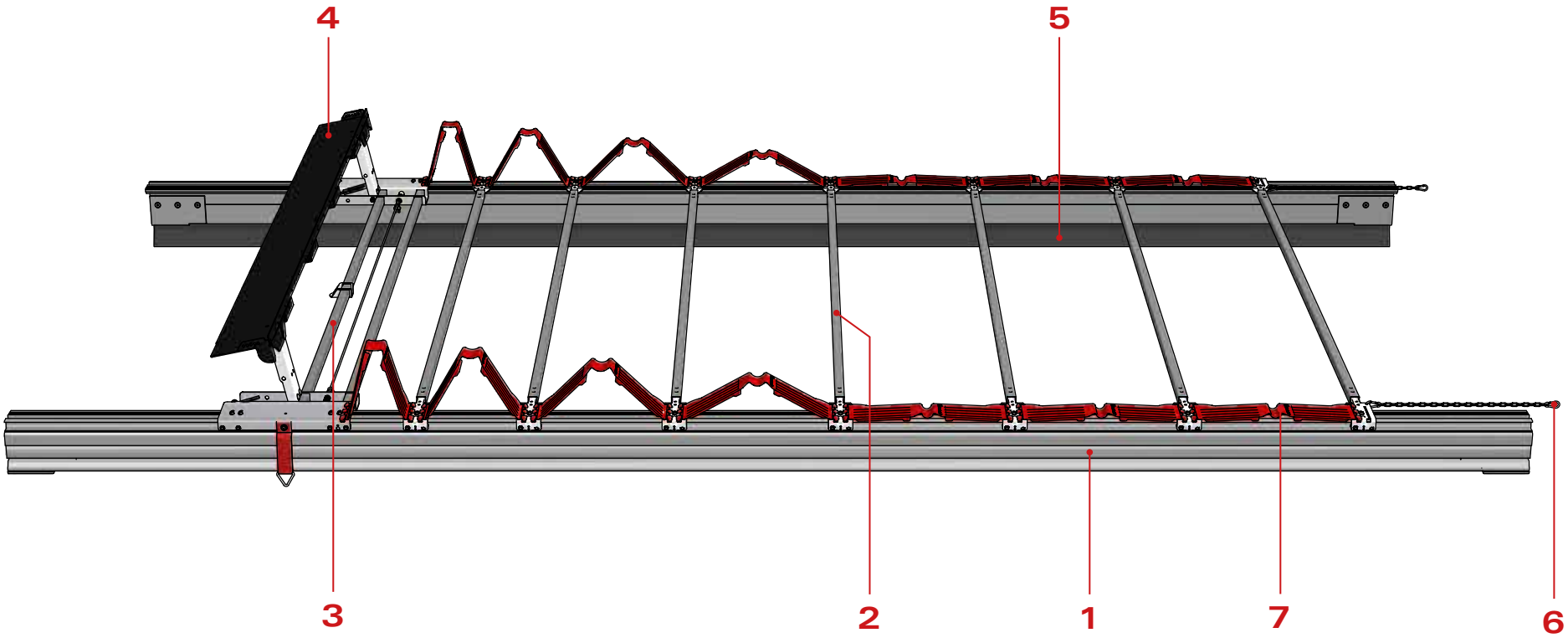

1	Solo rails
2	Roof stick
3	Collapsible backside
4	Back beam
5	PVC pelmet

6	Set accessories
7	Folding plate
8*	Carapax plate
9*	Pull bar

* Not visible on the composition drawing above.

1 Solo rails

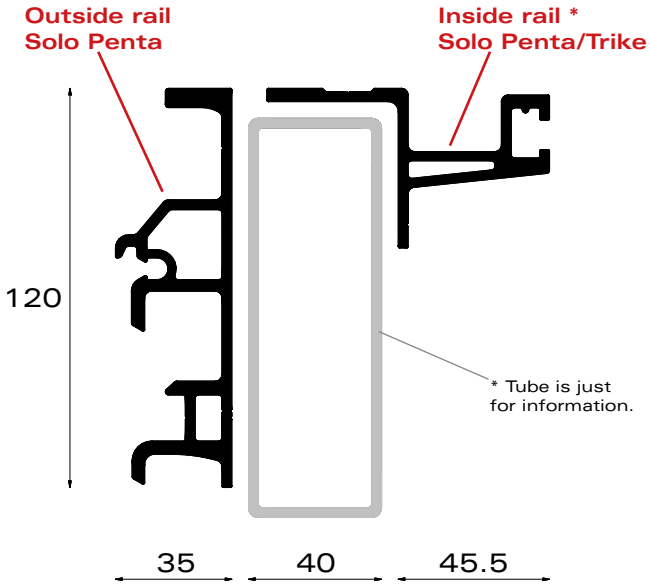

	PART NR.
Rail (out) L = 7,8m	162-41780
Rail (out) L = 8,5m	162-41850
Rail (in) L = 7,8m	162-43780
Rail (in) L = 8,5m	162-43850

Outside rail Solo Penta	Inside rail Solo
Ix : 130cm^4 Iy : 10cm^4 ± 2,8 kg/m	Ix : 9cm^4 Iy : 33cm^4 ± 1,8 kg/m

* Inside rail serves for Solo Penta and Solo Trike

2a Roof stick for sliding roof

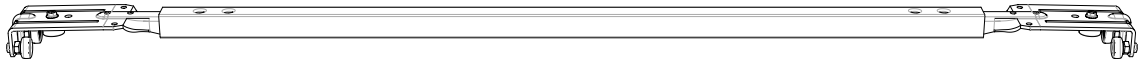

	PART NR.
SB=2550 - Type SP	224-39001
SB=2550 - Type AS (Al)	224-39021

2b Roof stick for fixed roof with polyester cover

fix

	PART NR.
SB=2550 - Type SP	224-39101
SB=2550 - Type AS (Al)	224-39121
Mounting set roof stick fix	144-10049

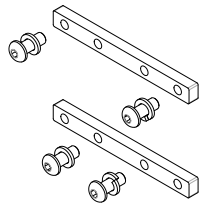

* Roof stick screwed to rail with bolts

* 1 set/roof stick

2c Roof stick for fixed roof with tarpaulin cover

fix

	PART NR.
SB=2550 - Type SP	224-39201
SB=2550 - Type AS (Al)	224-39221
Mounting set roof stick fix	144-10049

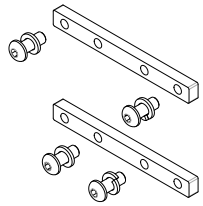

* Roof stick screwed to rail with bolts

* 1 set/roof stick

3a Collapsible backside

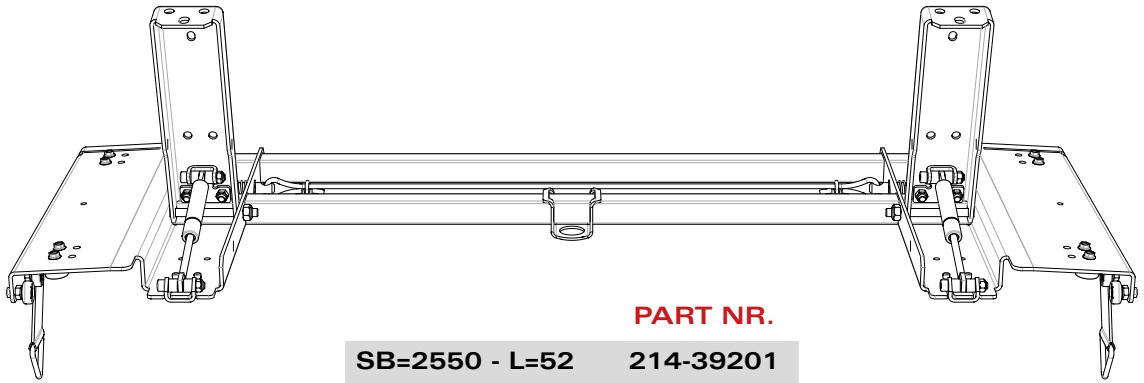

	PART NR.
SB=2550 - L=52	214-39201

6a Set accessories

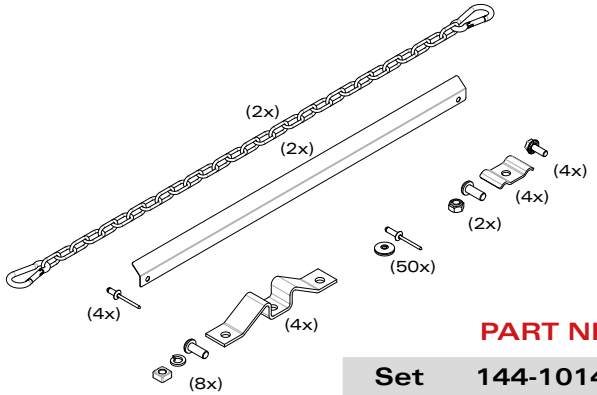

	PART NR.
Set	144-10148

3b Collapsible backside for fixed roof with tarpaulin cover

	PART NR.
SB=2550 - L=100	324-39201

6b Set accessories Twin

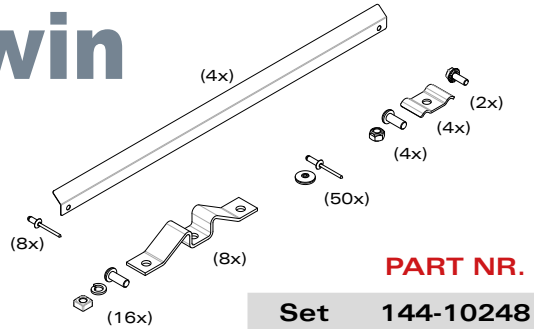

	PART NR.
Set	144-10248

* Solo Penta Twin sliding roof: this set replaces the basic set accessories (144-10001)!

Front header

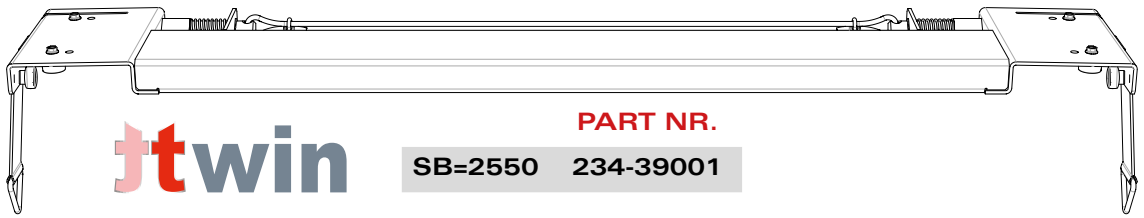

	PART NR.
SB=2550	234-39001

6c Set lock collapsible backside

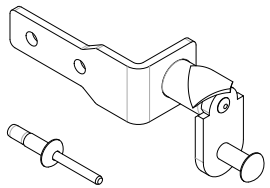

	PART NR.
Set	144-10086

6d Set accessories external unlocking

	PART NR.
Set	144-10174

4a Back beam

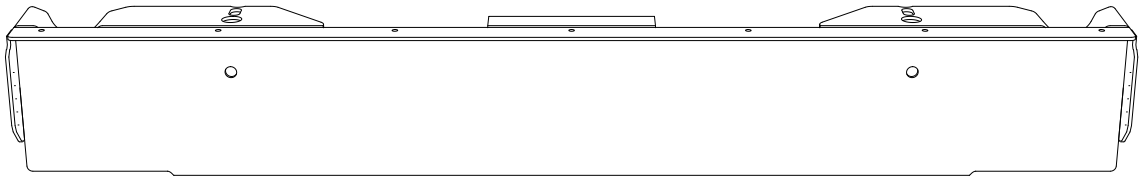

	PART NR.
SB=2550 - 145Z	193-39001
Mounting set	144-10022

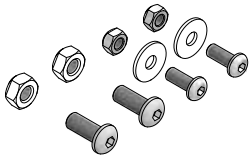

4b Back beam

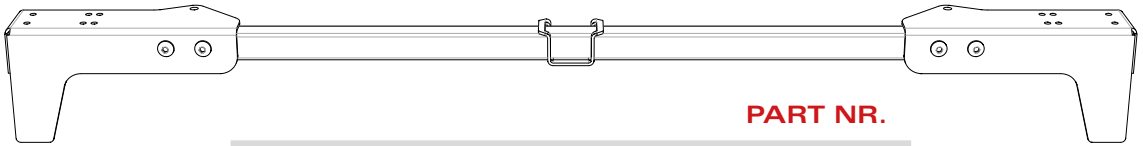

	PART NR.
Set back beam tube 30x30mm	144-10037
Tube 30x30x2mm	112-39001

Rain strip for back beam (4a)

	PART NR.
SB=2550	192-01601

Rain strip for front header

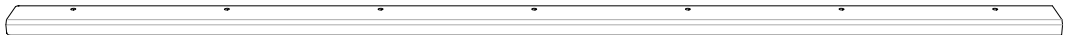

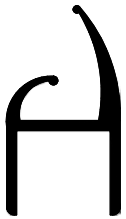

ttwin

	PART NR.
Rain strip SB=2550	192-01606
PVC pelmet L = 2,6m (black)	242-20001
Mounting strip 30x5mm L = 2,6m	292-07001

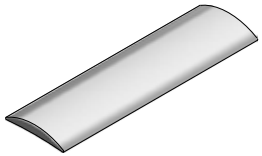

7 Folding plate

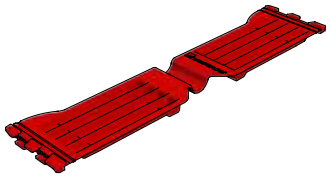

	PART NR.
Type 400	242-01004
Type 500	242-01005
Type 600	242-01006
Type 700	242-01007
Type 570	242-01057
Type 650	242-01065

5 PVC pelmet (black)

	PART NR.
L = 9m	242-14109
L = 14m	242-14114

9 Pull bars & webbing

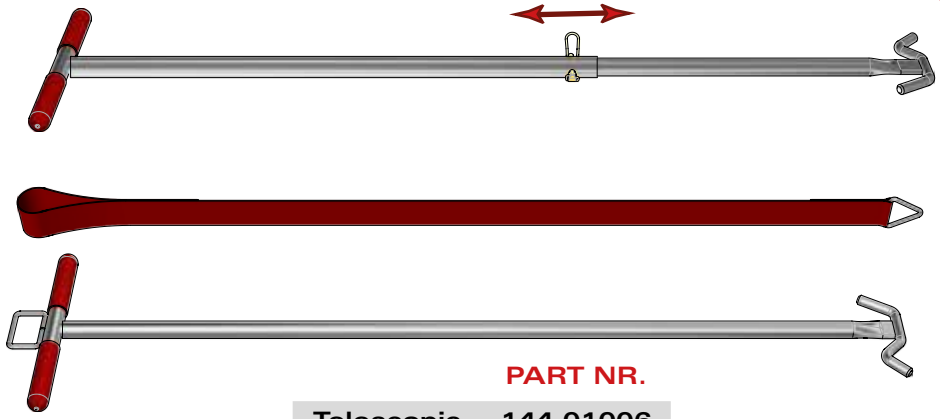

	PART NR.
Telescopic	144-01006
Webbing	144-01500
Standard	144-01003

8 Carapax plate

PART NR.

291-03004

* only needed for roof with Carapax cover

Roller

* Please see chapter Penta Slider Systems for options!

Spare Parts

omega solo penta

For roof sticks

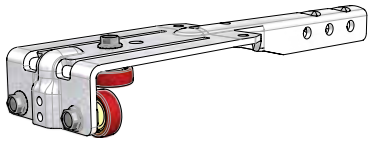

Assembled bracket

PART NR.

174-39001

Roller bearing plastic

PART NR.

132-01001

Bolt tensilock M6x16mm

PART NR.

091-23001

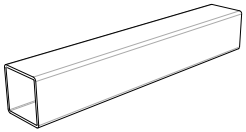

Tube30x30x1,5mm

	PART NR.
L = 2185mm	112-01003

For collapsible backside

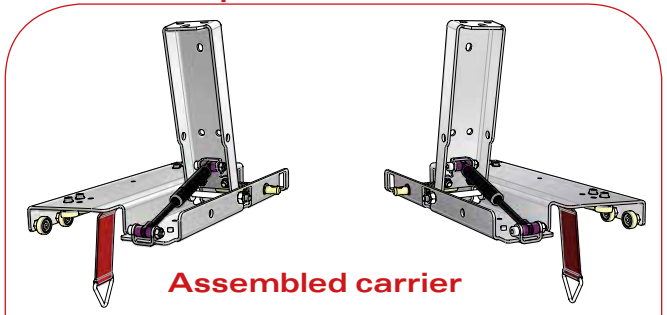

Assembled carrier

	PART NR.
Left	204-39201
Right	204-39202

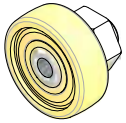

Roller bearing steel

PART NR.

132-03001

Bolt tensilock M6x16mm

PART NR.

091-23001

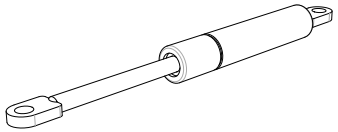

Gas spring 700N

PART NR.

302-01001

For accessories set

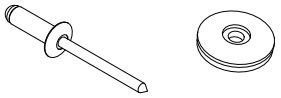

Rivet & washer

	PART NR.
50 pieces	144-10003

Rope clamp

PART NR.

292-01001

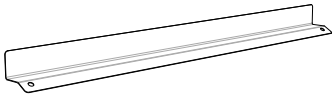

Protection plate

PART NR.

142-06006

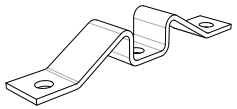

Locking nose

PART NR.

142-05002

Chain with 2 hooks

PART NR.

142-07001

www.kogel.com

options & variations

Page

Roof sticks	124
Back beams	130
PVC pelmets	134

options & variations for roof sticks

Roof stick for sliding roof

	Steel 30x30	Al 30x40
SB=2550 - pressed	224-01001	
SB=2550 - bolted		224-03001
SB=Spec - pressed	224-01003	
SB=Spec - bolted	224-02003	224-03003

alto Trike
alto Trike Light
duo Trike
duo Trike Light
kubus Trike
kubus Trike Light

micro Trike
alto Penta
duo Penta
pico
euro

Roof stick for sliding roof with anti-fly hook

	Steel 30x30	Al 30x40
SB=2550 - pressed	224-91001	
SB=2550 - bolted		224-93001
SB=Spec - pressed	224-91003	
SB=Spec - bolted	224-92003	224-93003

alto Trike
duo Trike
kubus Trike
alto Penta

Roof stick for fixed roof with polyester cover fixed to the rail with bolts

fix

	Steel 30x30	Al 30x40
SB=2550 - pressed	224-41101	
SB=2550 - bolted		224-43101
SB=Spec - pressed	224-41103	
SB=Spec - bolted	224-42103	224-43103
Mounting set roof stick fix	144-10048	

alto Trike Light
duo Trike Light
kubus Trike Light
micro Trike
duo Penta

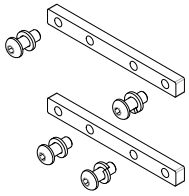

* 1 set/roof stick

Roof stick for fixed roof with tarpaulin cover fixed to the rail with monobolts

	Steel 30x30	Al 30x40
SB=2550 - pressed	224-41201	
SB=2550 - bolted		224-43201
SB=Spec - pressed	224-41203	
SB=Spec - bolted	224-42203	224-43203

alto Trike
duo Trike
kubus Trike
alto Penta

Roof stick for fixed roof with tarpaulin cover fixed to the rail with bolts

	Steel 30x30	Al 30x40
SB=2550 - pressed	224-41211	
SB=2550 - bolted		224-43211
SB=Spec - pressed	224-41213	
SB=Spec - bolted	224-42213	224-43213
Mounting set roof stick fix	144-10048	

alto Trike Light
duo Trike Light
kubus Trike Light
micro Trike
duo Penta

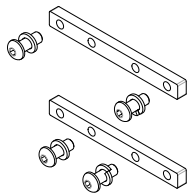

* 1 set/roof stick

options & variations for roof sticks

Roof stick for fixed roof with polyester cover fixed to the rail with bolts

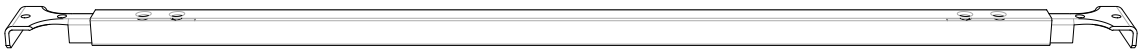

	Steel 30x30	Al 30x40
SB=2550 - pressed	224-01101	
SB=2550 - bolted		224-03101
SB=Spec - pressed	224-01103	
SB=Spec - bolted	224-02103	224-03103
Mounting set roof stick fix	144-10048	

pico

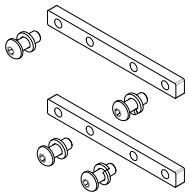

* 1 set/roof stick

Roof stick for fixed roof with tarpaulin cover fixed to the rail with bolts

	Steel 30x30	Al 30x40
SB=2550 - pressed	224-01211	
SB=2550 - bolted		224-03211
SB=Spec - pressed	224-01213	
SB=Spec - bolted	224-02213	224-03213
Mounting set roof stick fix	144-10048	

pico

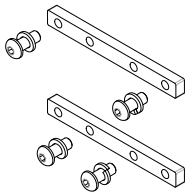

* 1 set/roof stick

Roof stick for sliding roof

	Steel 30x30	Al 30x40
SB=2550 - pressed	224-30001	
SB=2550 - bolted		224-33001
SB=Spec - pressed	224-30003	
SB=Spec - bolted	224-32003	224-33003

ferro

Roof stick for sliding roof

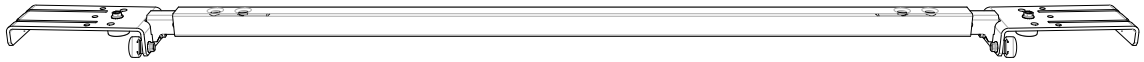

	Steel 30x30	Al 30x40
SB=2550 - pressed	224-01031	
SB=2550 - bolted		224-03031
SB=Spec - pressed	224-01033	
SB=Spec - bolted	224-02033	224-03033

plano

Roof stick for fixed roof with tarpaulin cover fixed to the rail with monobolts

fix

	Steel 30x30	Al 30x40
SB=2550 - pressed	224-01231	
SB=2550 - bolted		224-03231
SB=Spec - pressed	224-01233	
SB=Spec - bolted	224-02233	224-03233

plano

Roof stick for fixed roof with polyester cover fixed to the rail with monobolts

fix

	Steel 30x30
SB=2550 - riveted	224-02161
SB=Spec - riveted	224-02163

plano

options & variations for roof sticks

Roof stick for sliding roof with TIR-protection

	Steel 30x30	Al 30x40
SB=2550 - pressed	224-70001	
SB=2550 - bolted		224-73001
SB=Spec - pressed	224-70003	
SB=Spec - bolted	224-72003	224-73003

TIR

euro

Roof stick for fixed roof with polyester cover fixed to the rail with bolts

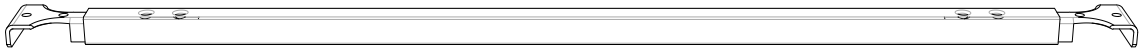

	Steel 30x30	Al 30x40
SB=2550 - pressed	224-21101	
SB=2550 - bolted		224-23101
SB=Spec - pressed	224-21103	
SB=Spec - bolted	224-22103	224-23103
Mounting set roof stick fix	144-10048	

fix + TIR

euro

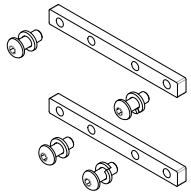

* 1 set/roof stick

Roof stick for fixed roof with tarpaulin cover fixed to the rail with bolts

	Steel 30x30	Al 30x40
SB=2550 - pressed	224-70211	
SB=2550 - bolted		224-73101
SB=Spec - pressed	224-70213	
SB=Spec - bolted	224-72213	224-73103
Mounting set roof stick fix	144-10048	

fix + TIR

euro

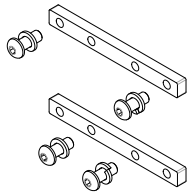

* 1 set/roof stick

Roof stick for sliding roof

	Steel 30x30	Al 30x40
SB=2550 - pressed	224-39001	
SB=2550 - bolted		224-39021
SB=Spec - pressed	224-39003	
SB=Spec - bolted	224-39303	224-39023

solo Trike

solo Penta

Roof stick for fixed roof with polyester cover fixed to the rail with bolts

	Steel 30x30	Al 30x40
SB=2550 - pressed	224-39101	
SB=2550 - bolted		224-39121
SB=Spec - pressed	224-39103	
SB=Spec - bolted	224-39123	224-39133
Mounting set roof stick fix	144-10049	

solo Trike

solo Penta

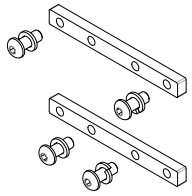

* 1 set/roof stick

Roof stick for fixed roof with tarpaulin cover fixed to the rail with bolts

	Steel 30x30	Al 30x40
SB=2550 - pressed	224-39201	
SB=2550 - bolted		224-39221
SB=Spec - pressed	224-39203	
SB=Spec - bolted	224-39213	224-39223
Mounting set roof stick fix	144-10049	

solo Trike

solo Penta

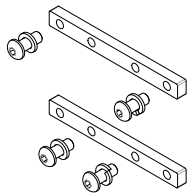

* 1 set/roof stick

options & variations for back beams

Back beam - 80Z

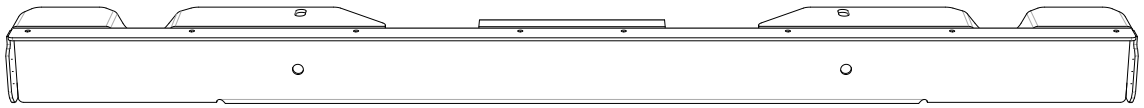

	PART NR.
SB=2550	193-05031
SB=Spec	193-05033
Mounting set	144-10022

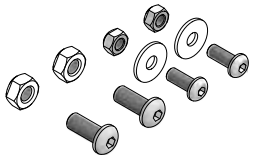

plano

Back beam - 125Z

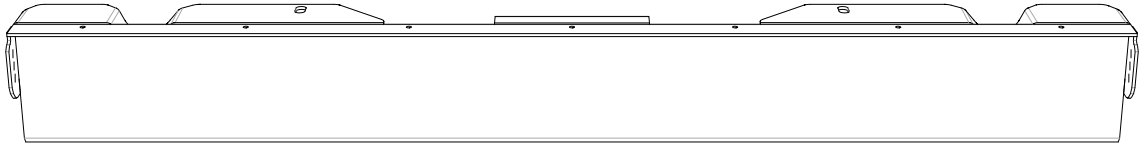

	PART NR.
SB=2550	193-11031
SB=Spec	193-11033
Mounting set	144-10022

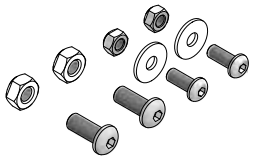

plano

Back beam - 125Z

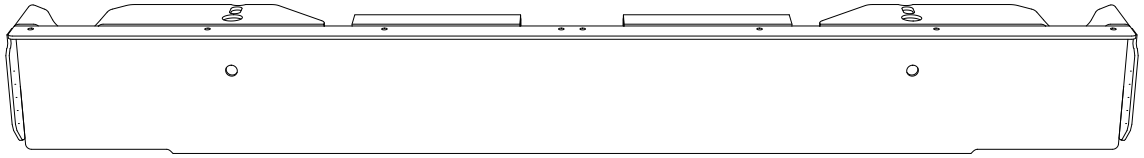

	PART NR.
SB=2550	193-11001
SB=Spec	193-11003
Mounting set	144-10022

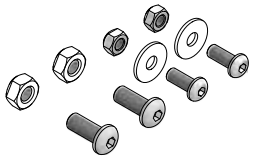

kubus **Trike**

kubus **Trike Light**

micro **Trike**

pico

Back beam - 145Z

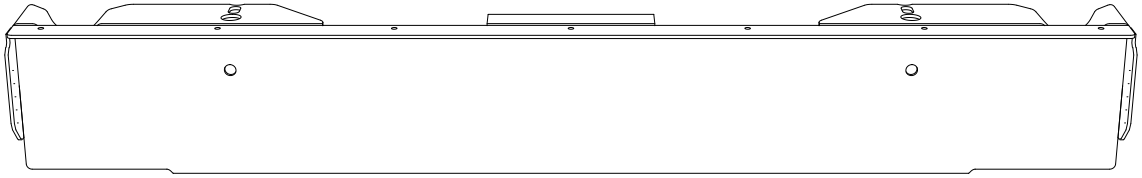

	PART NR.
SB=2550	193-14001
SB=Spec	193-14003
Mounting set	144-10022

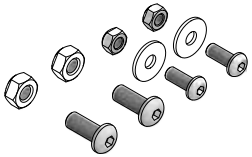

duo Trike
duo Trike Light
duo Penta
solo Trike
solo Penta

Back beam - 208Z

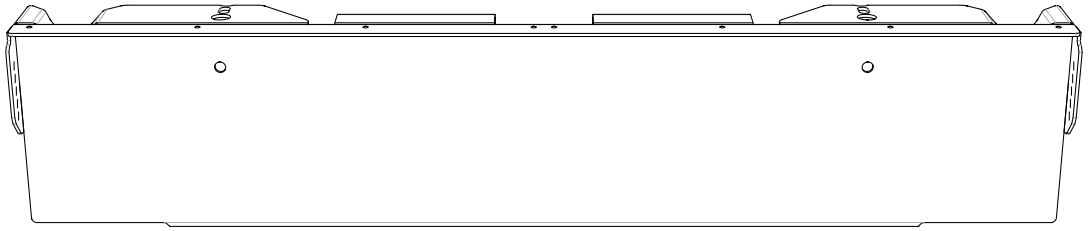

	PART NR.
SB=2550	193-18001
SB=Spec	193-18003
Mounting set	144-10022

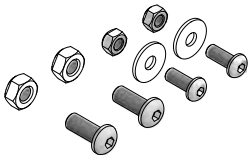

alto Trike
alto Trike Light
alto Penta
euro

Back beam 80x40mm

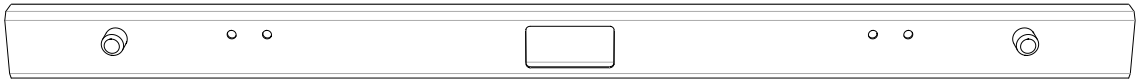

	PART NR.
Set back beam tube 80x40mm	144-10004
SB=2550 - Tube 80x40x3mm	193-08031
SB=Spec - Tube 80x40x3mm	193-08033

plano

Back beam 120x40mm

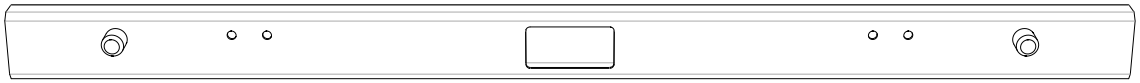

	PART NR.
Set back beam tube 120x40mm	144-10004
SB=2550 - Tube 120x40x3mm	193-39121
SB=Spec - Tube 120x40x3mm	193-39123

solo Trike

solo Penta

Back beam 30x30mm

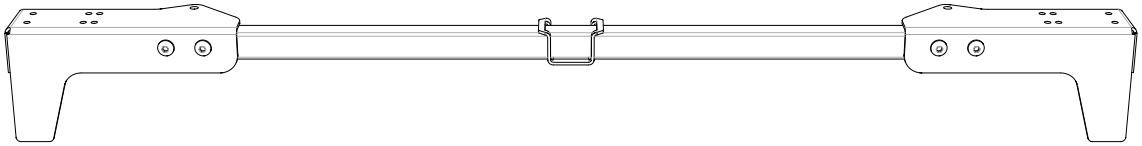

	PART NR.
Set back beam tube 30x30mm	144-10037
SB=2550 - Tube 30x30x2mm	112-07001
SB=Spec - Tube 30x30x2mm	112-07003

alto **Trike**
alto **Trike Light**
duo **Trike**
duo **Trike Light**
kubus **Trike**
kubus **Trike Light**

micro **Trike**
alto **Penta**
duo **Penta**
pico
ferro

Back beam 30x30mm

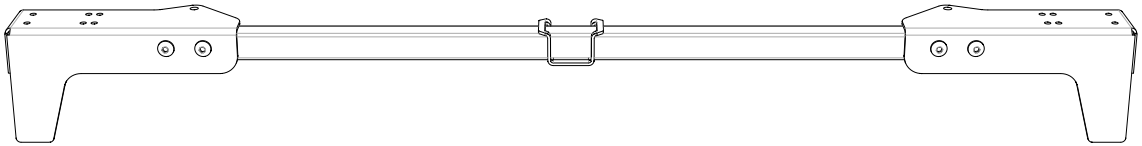

	PART NR.
Set back beam tube 30x30mm	144-10037
SB=2550 - Tube 30x30x2mm	112-39001
SB=Spec - Tube 30x30x2mm	112-39003

solo **Trike**
solo **Penta**

options & variations for PVC pelmets

PVC pelmet 02

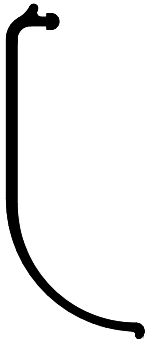

	PART NR.
L = 9m (grey)	242-02009
L = 15m (grey)	242-02015
L = 9m (black)	242-02109
L = 14m (black)	242-02114

duo **Penta**

PVC pelmet 12

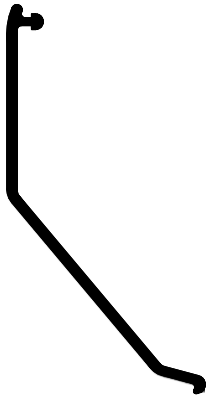

	PART NR.
L = 9m (grey)	242-12009
L = 14m (grey)	242-12014
L = 15m (grey)	242-12015
L = 9m (black)	242-12109
L = 14m (black)	242-12114
L = 15m (black)	242-12115
L = 20m (black)	242-12120
L = 14m (white)	242-12214

kubus **Trike**

kubus **Trike Light**

plano

PVC pelmet 13

	PART NR.
L = 9m (grey)	242-13009
L = 14m (grey)	242-13014
L = 9m (black)	242-13109
L = 14m (black)	242-13114
L = 15m (black)	242-13115

euro

PVC pelmet 14

	PART NR.
L = 9m (grey)	242-14009
L = 14m (grey)	242-14014

L = 9m (black)	242-14109
L = 14m (black)	242-14114
L = 16m (black)	242-14116
L = 21m (black)	242-14121
L = 28m (black)	242-14128

alto Trike
alto Trike Light
duo Trike
duo Trike Light
solo Trike

PVC pelmet 15

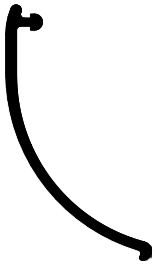

	PART NR.
L = 9m (black)	242-15109
L = 14m (black)	242-15114

micro Trike
plano

PVC pelmet 16

	PART NR.
L = 9m (black)	242-16109
L = 14m (black)	242-16114

alto Penta

axces
lifting systems

Type of lifting system	Page
Hydraman	138
Hydratwin	140
Hydramatic	142
Set connect	152
Set lift & drive	154

axceshydraman

lifting systems by versus

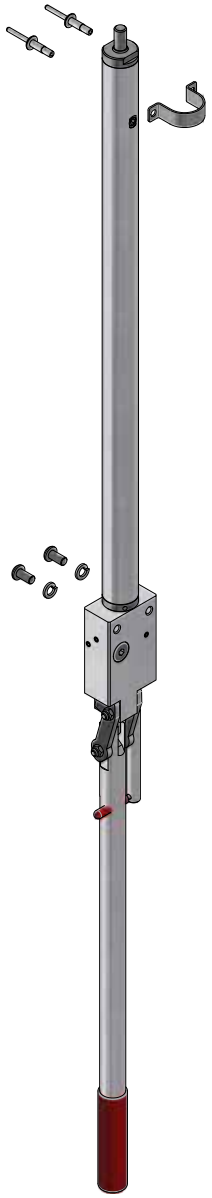

	PART NR.
Hydraman 500	802-01007

* Each Hydraman-pump must be combined with a set connect Hydraman or set lift & drive Hydraman.
** The oil we recommend to use = HLP 46 or HLP 68.
*** The mounting set for the pump is included in the set connect Hydraman (144-10095) or in the set lift & drive Hydraman (144-10109).

axceshydratwin

lifting systems by versus

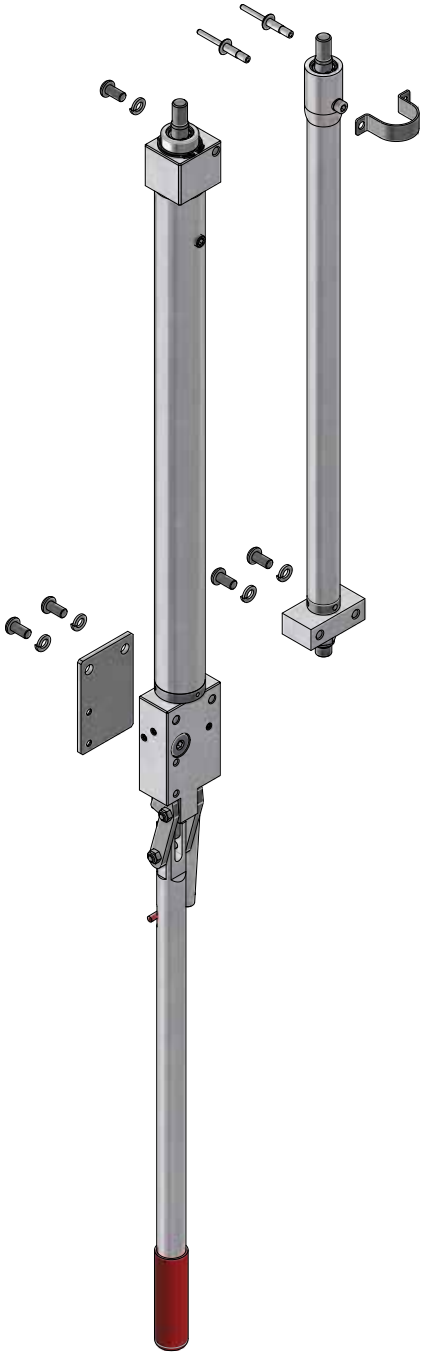

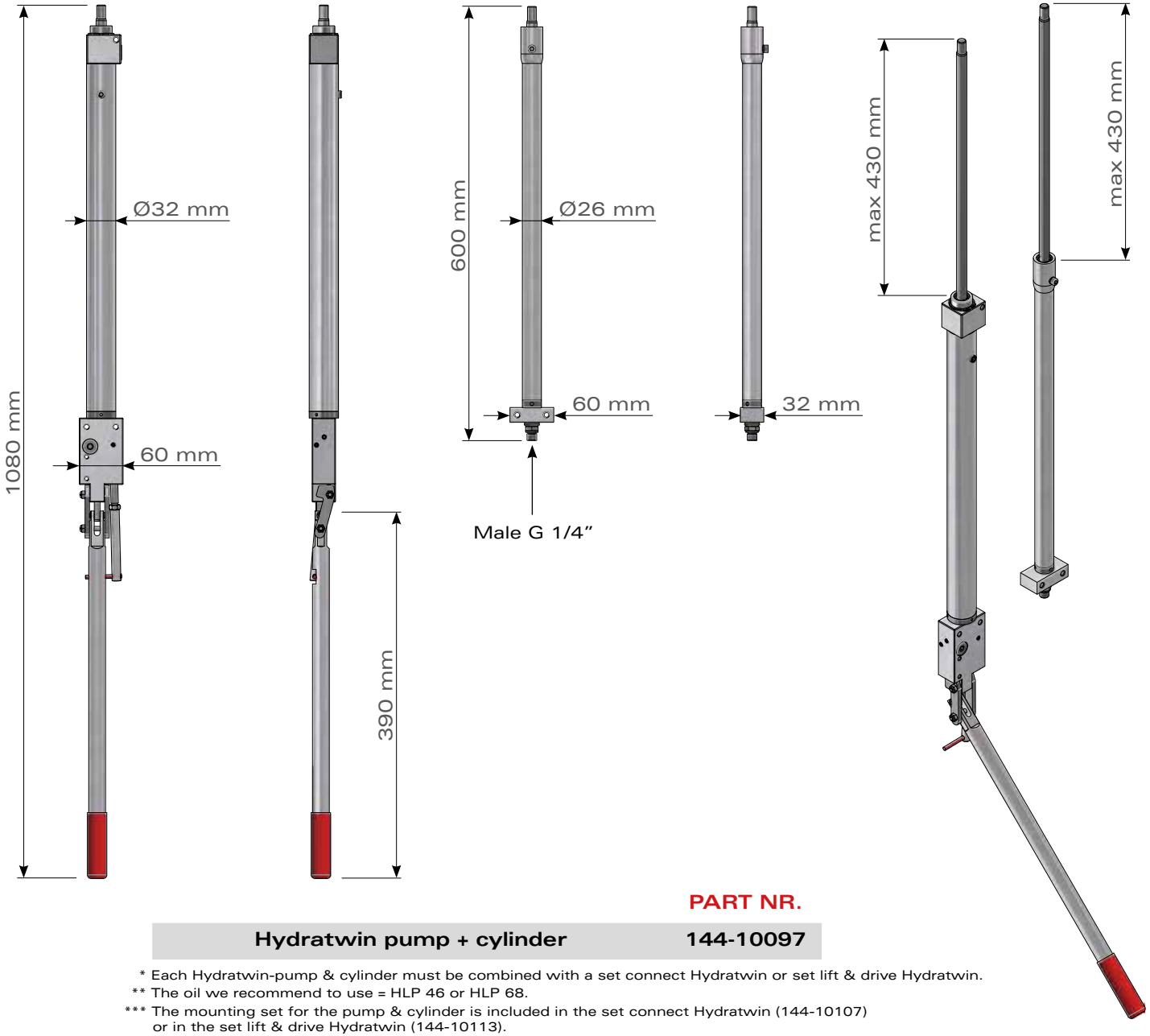

	PART NR.
Hydratwin pump + cylinder	**144-10097**

* Each Hydratwin-pump & cylinder must be combined with a set connect Hydratwin or set lift & drive Hydratwin.
** The oil we recommend to use = HLP 46 or HLP 68.
*** The mounting set for the pump & cylinder is included in the set connect Hydratwin (144-10107) or in the set lift & drive Hydratwin (144-10113).

axceshydramatic

lifting systems by versus

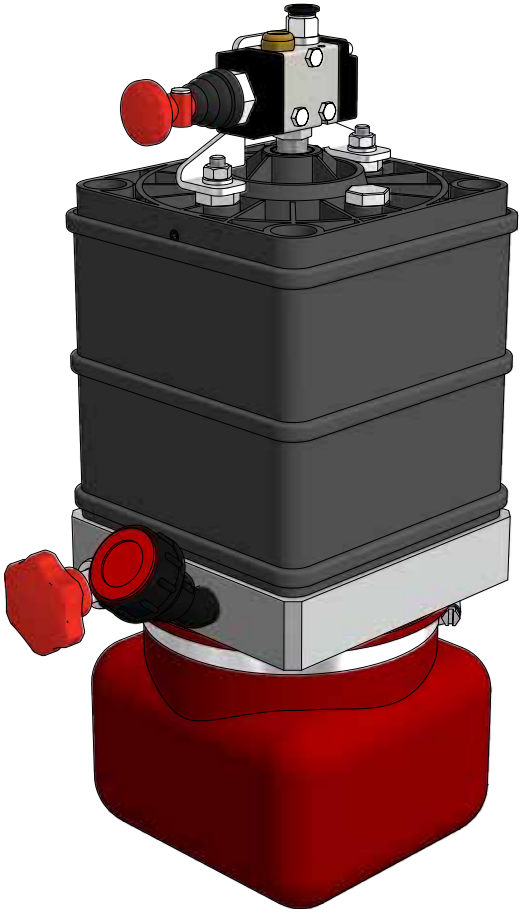

TYPE S1

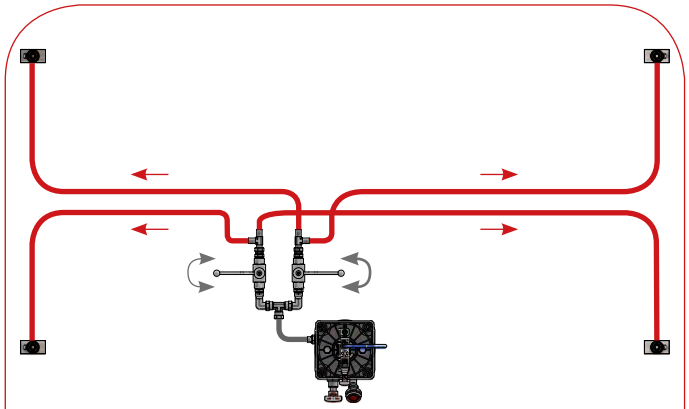

S1: Roof can be lifted each side separately or both sides together. The cylinders will not necessarily rise simultaneously but in a random order.

Choose S1 if:
- chassis-width >= 2550mm
  and/or
- chassis-length >= 5000mm
  and/or
- simultaneous lift of the cylinders is not important

TYPE S2

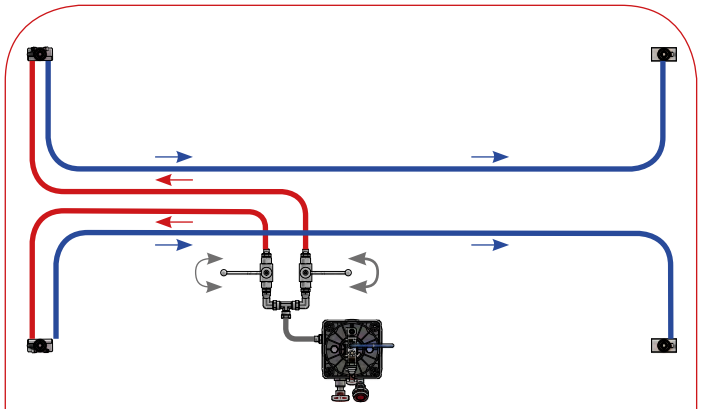

S2: Roof can be lifted each side separately or both sides together. Each pair of cylinders (front + rear) will always rise simultaneously but if both sides of the roof are lifted at the same time both pairs will not necessarily rise simultaneously but in a random order.

Choose S2 if:
- chassis-width >= 2550mm
  and/or
- simultaneous lifting of each pair of cylinders is important

TYPE S3

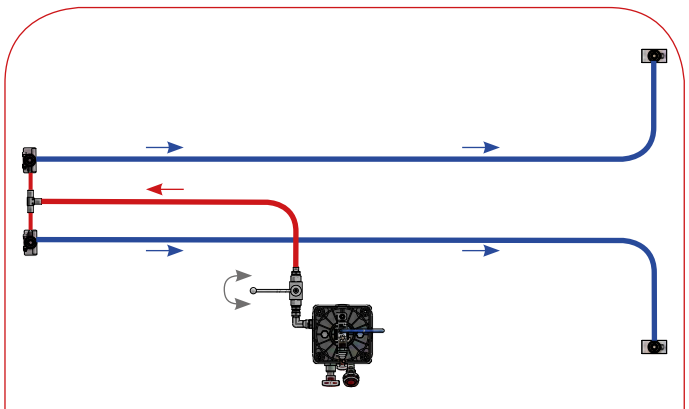

S3: Roof can only be lifted completely (left and right side together). All 4 cylinders will rise simultaneously.

Choose S3 if:
- chassis dimensions don't allow the use of S1 or S2
  and/or
- lifting all 4 corners of the roof simultaneously is important (e.g. because of a stiff, welded roof structure that can be damaged if not lifted simultaneously)

	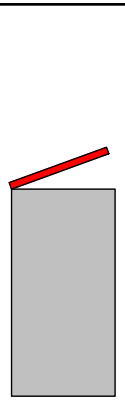	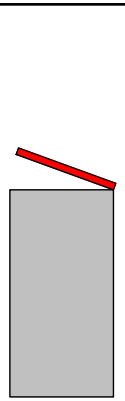	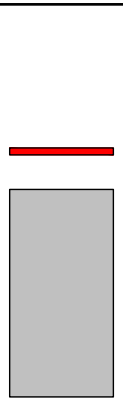	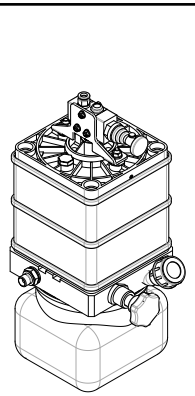	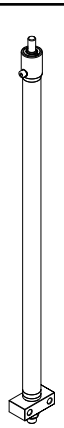	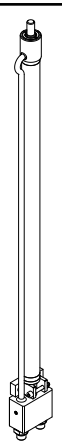	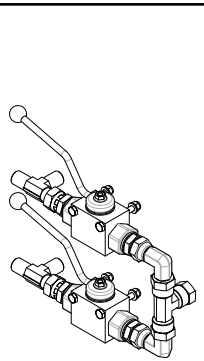	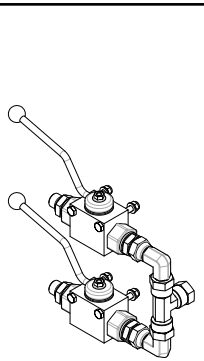	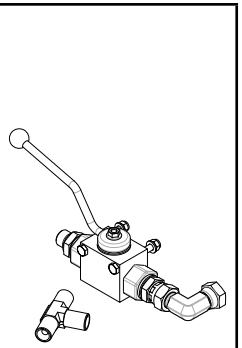
PART NR.				**802-01009**	**802-05004**	**802-05005**	**804-06001**	**804-06002**	**804-06003**
Type S1	✔	✔	✔	**1x**	**4x**		**1x**		
Type S2	✔	✔	✔	**1x**	**2x**	**2x**		**1x**	
Type S3			✔	**1x**	**2x**	**2x**			**1x**

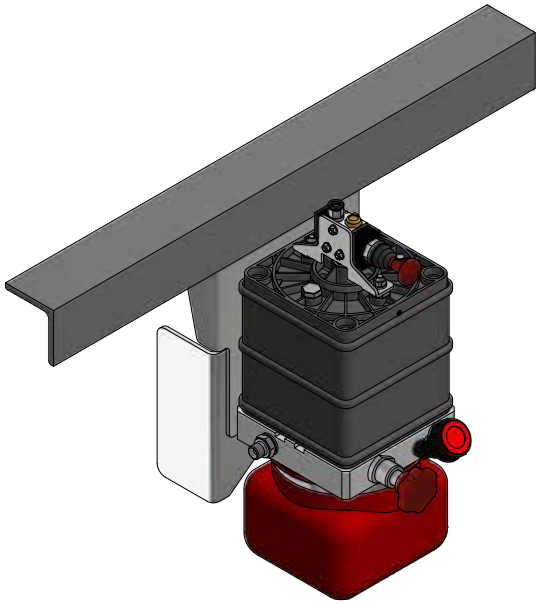

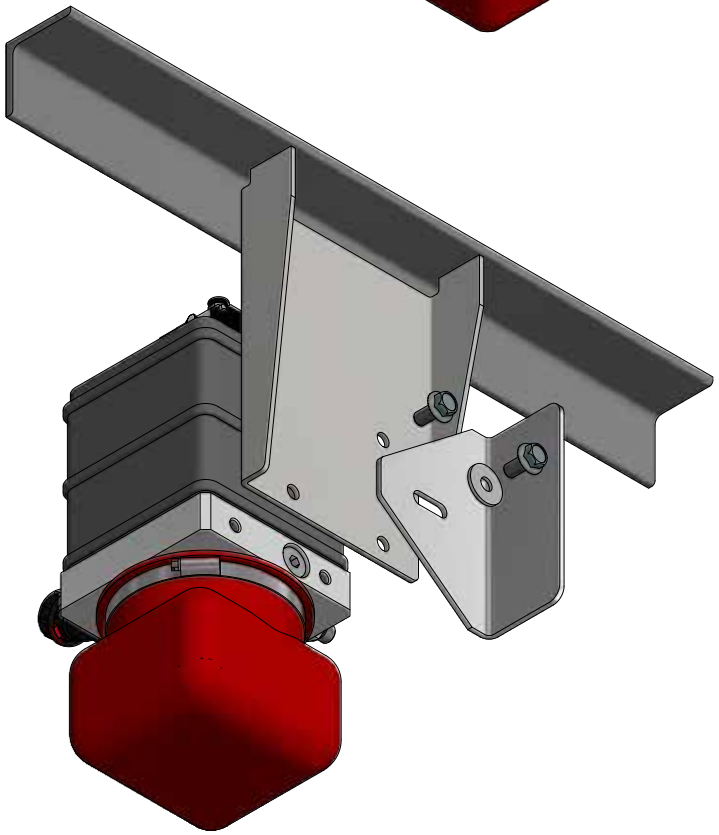

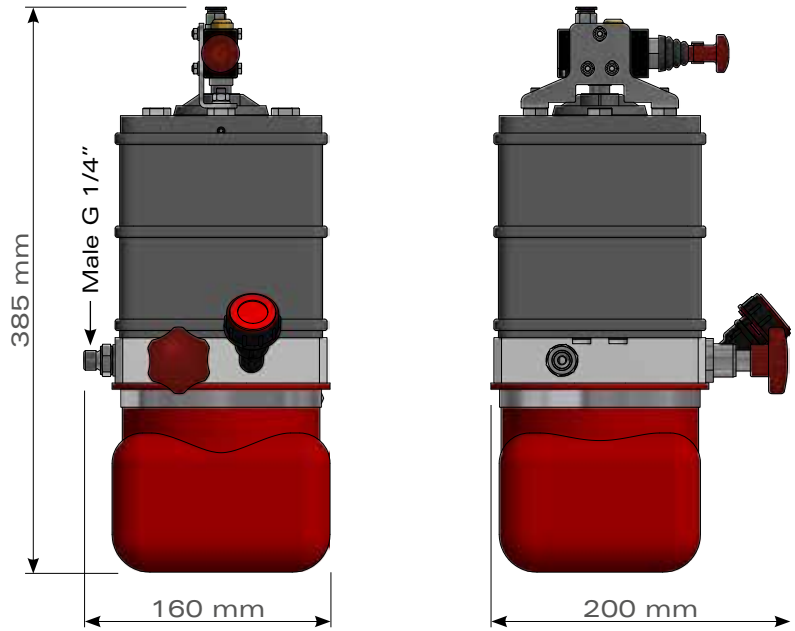

	PART NR.
Hydramatic pump	802-01009

* The oil we recommend to use = HLP 46 or HLP 68

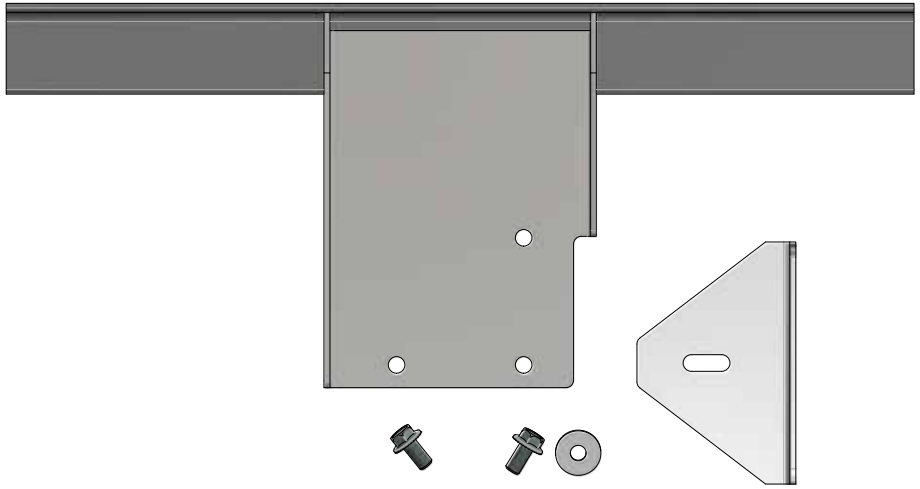

	PART NR.
Mounting set Hydramatic pump	144-10164

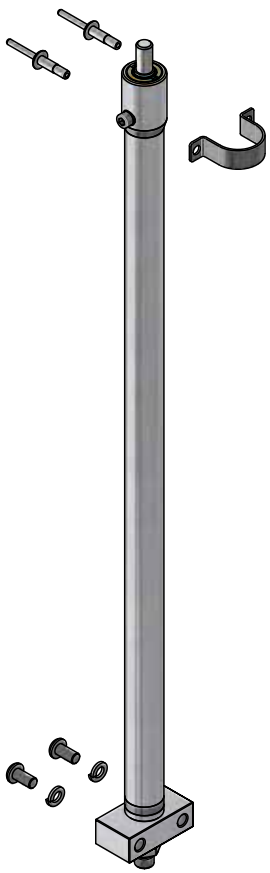

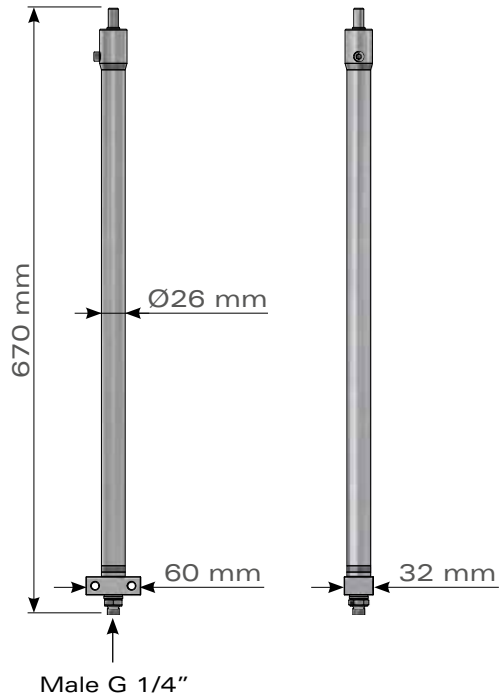

	PART NR.
Cylinder 500 SE	**802-05004**

* Each cylinder must be combined with a set connect Hydraman or set lift & drive Hydraman.
** The mounting set for the cylinder is included in the set connect Hydraman (144-10095) or in the set lift & drive Hydraman (144-10109).

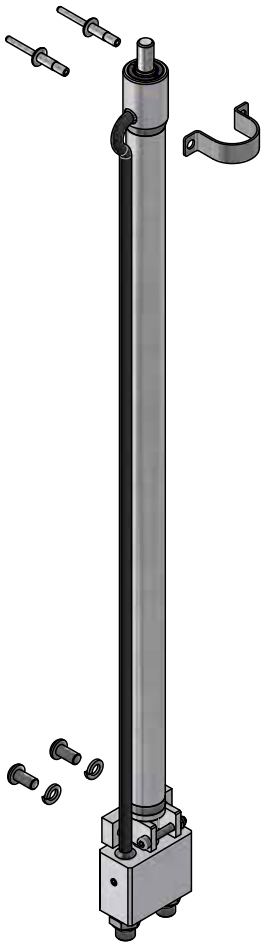

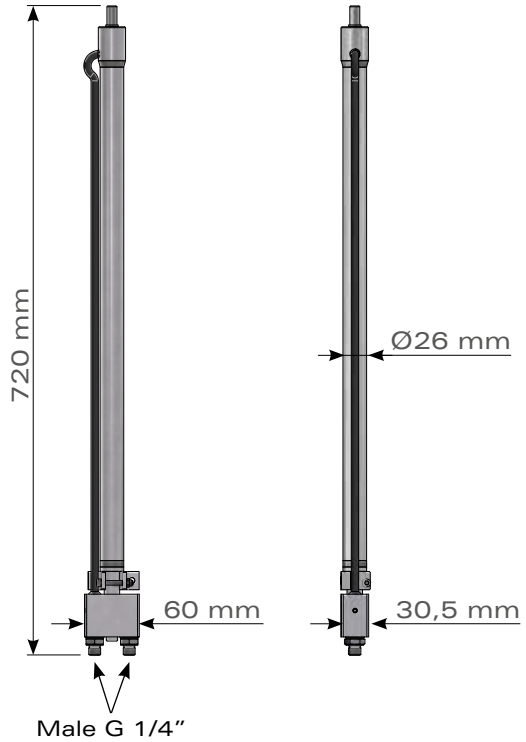

	PART NR.
Cylinder 500 DE	**802-05005**

* Each cylinder must be combined with a set connect Hydraman or set lift & drive Hydraman.
** The mounting set for the cylinder is included in the set connect Hydraman (144-10095) or in the set lift & drive Hydraman (144-10109).

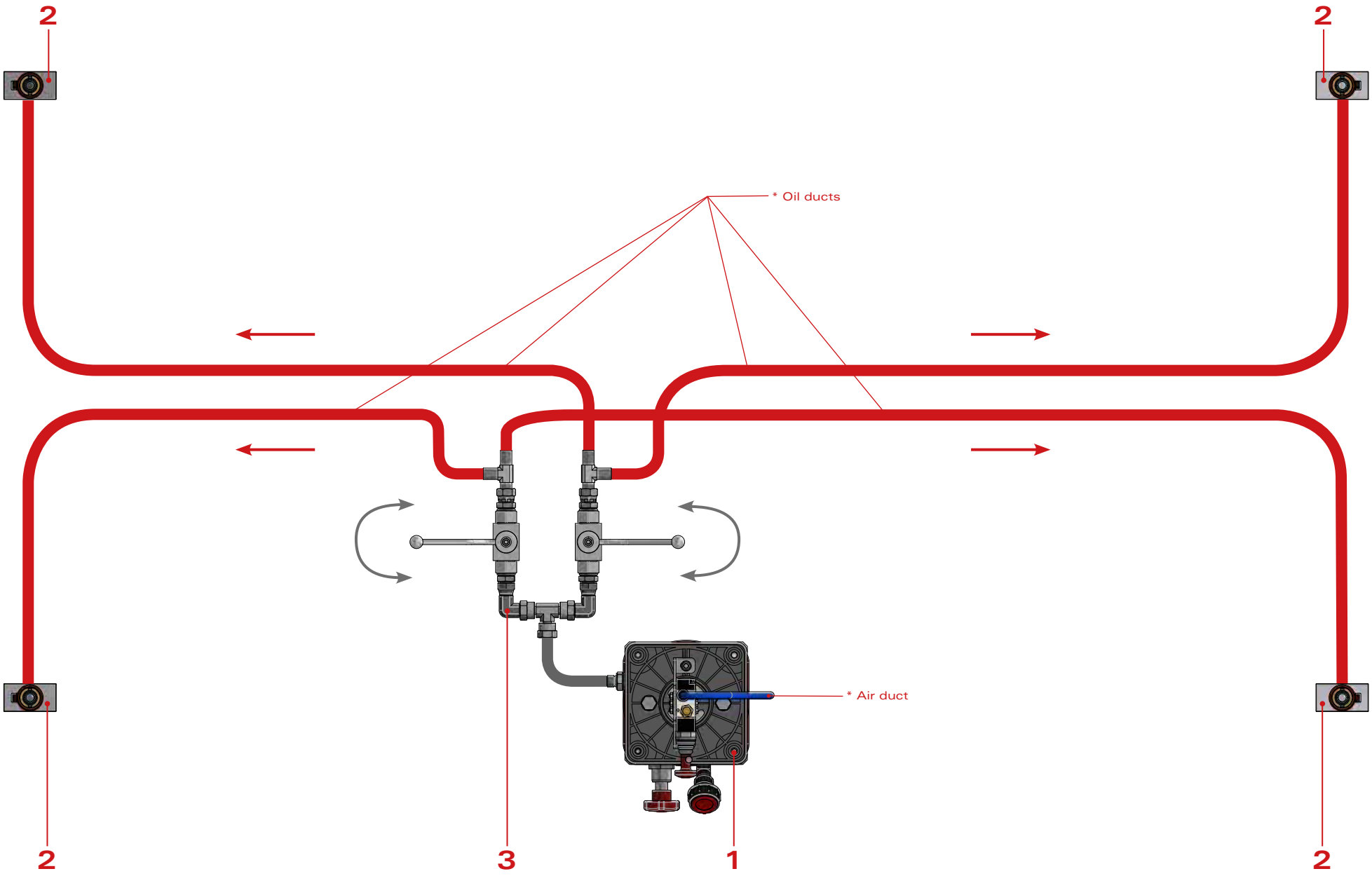
2
2
* Oil ducts
* Air duct
2
3
1
2

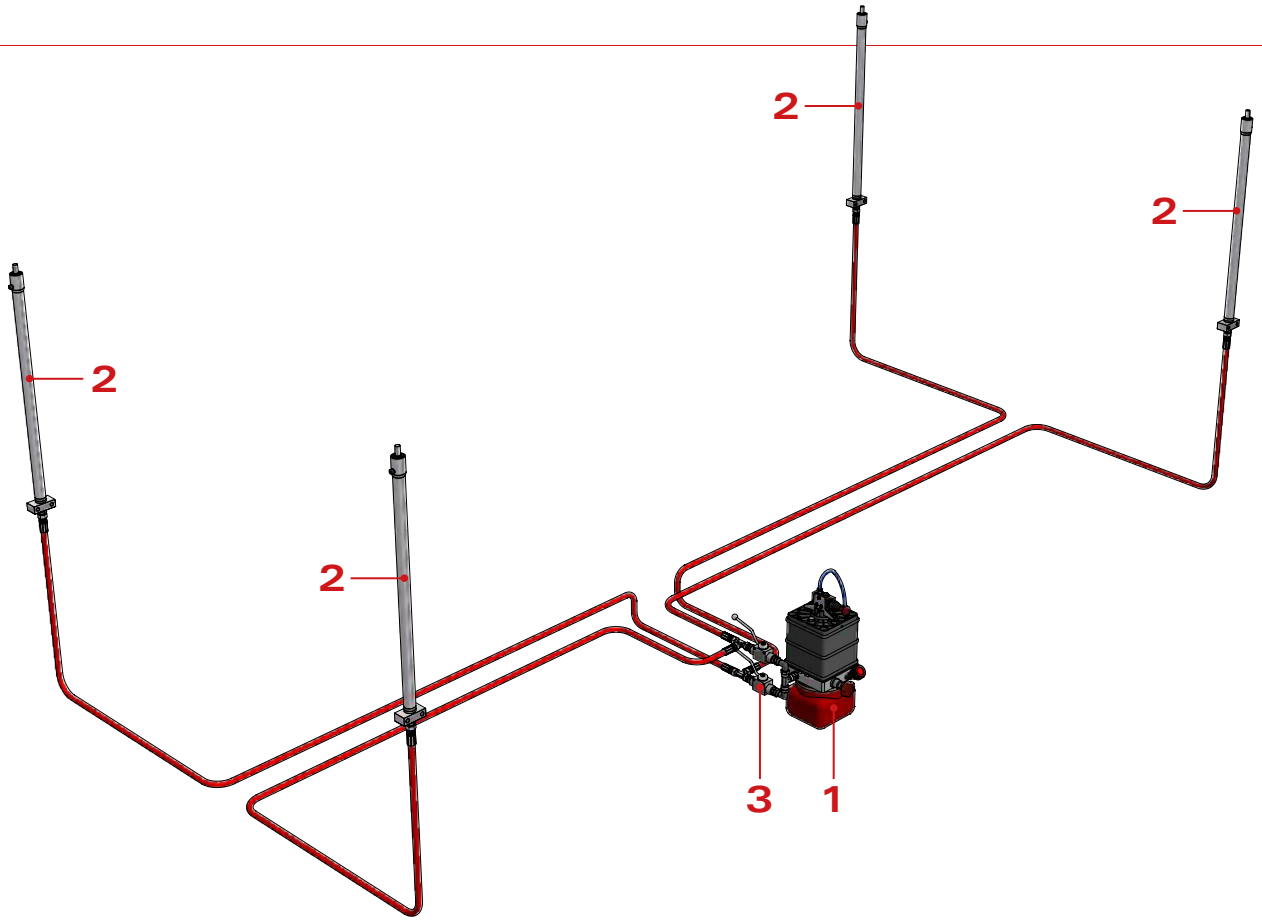

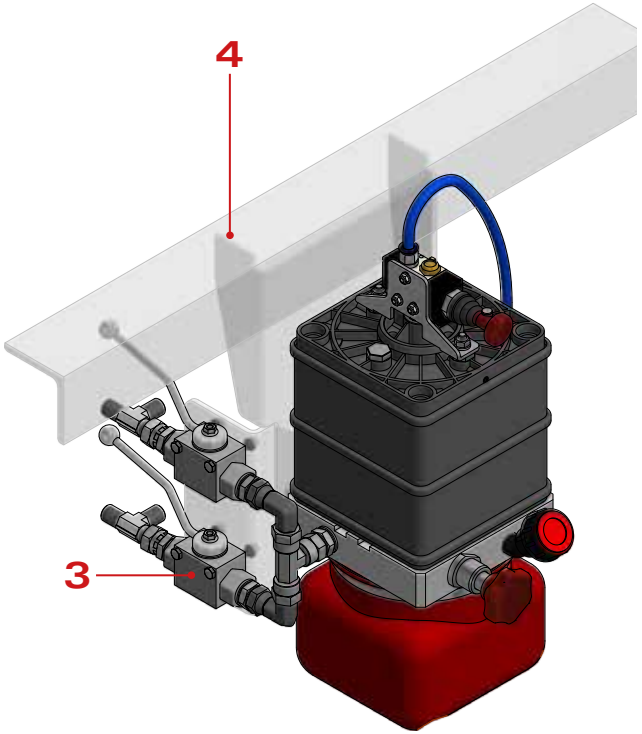

Nr.	Part Nr.	Qty	Description
1	802-01009	1	Pump-unit Hydramatic 1,5L
2	802-05004	4	Cylinder Hydramatic 500 SE
3	804-06001	1	Set connectors Hydramatic S1
4	144-10164	(1)	Mounting set Hydramatic pump
**	144-10095	(4)	Set connect Hydraman
**	144-10109	(4)	Set lift & drive Hydraman

* The oil and air ducts are not supplied by Versus-Omega
** Each cylinder must be combined with a set connect Hydraman or set lift & drive Hydraman.
These are not shown in the images.

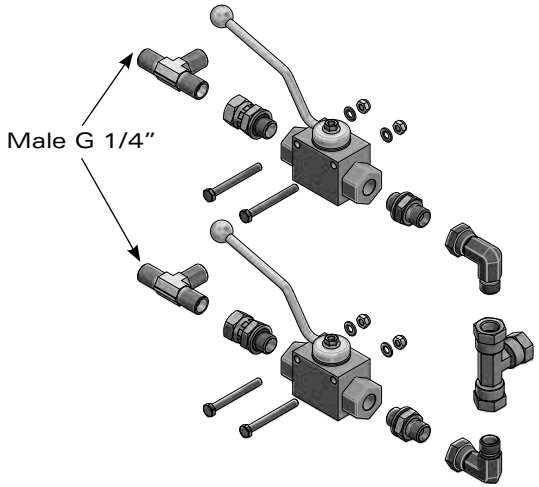

	PART NR.
Set connectors Hydramatic S1	804-06001

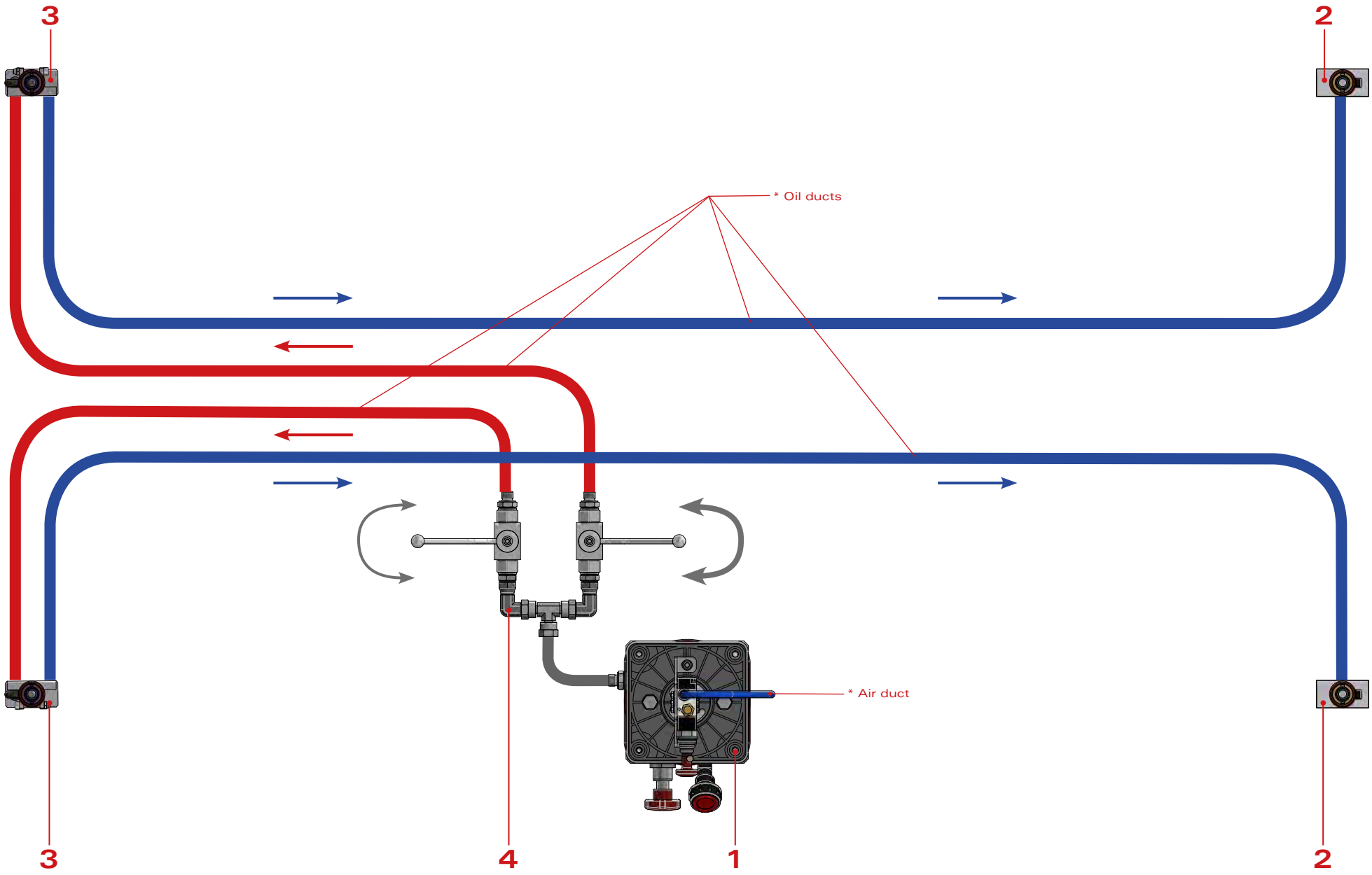
3
2
* Oil ducts
* Air duct
3
4
1
2

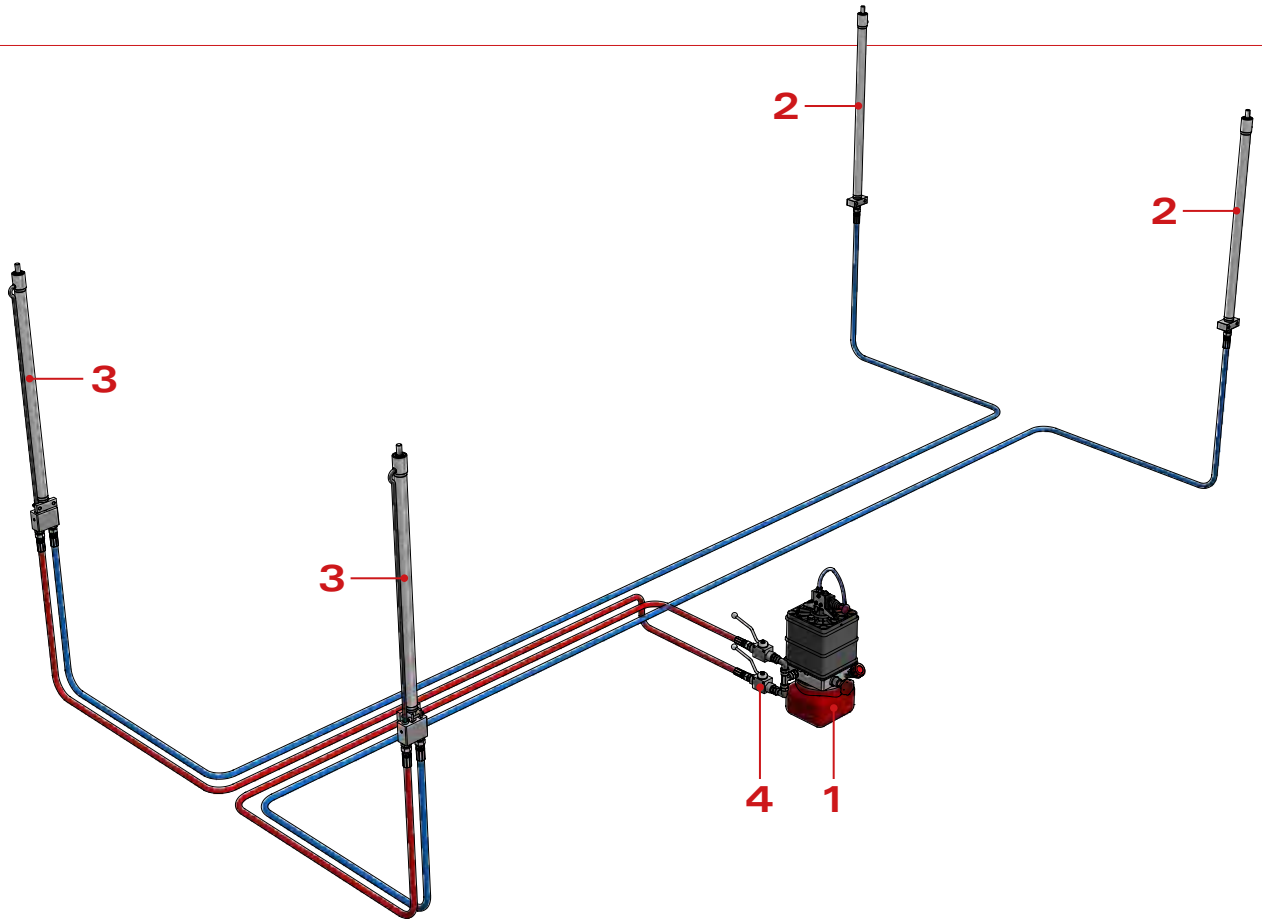

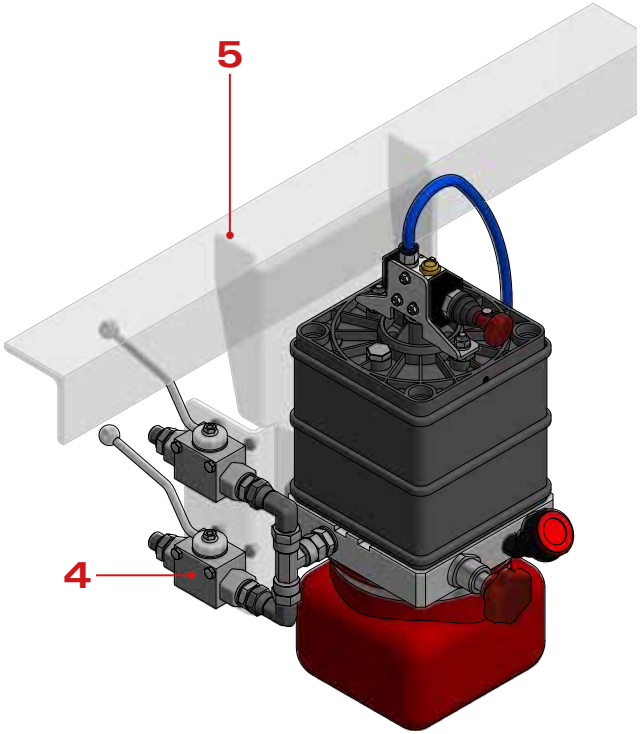

Nr.	Part Nr.	Qty	Description
1	802-01009	1	Pump-unit Hydramatic 1,5L
2	802-05004	2	Cylinder Hydramatic 500 SE
3	802-05005	2	Cylinder Hydramatic 500 DE
4	804-06002	1	Set connectors Hydramatic S2
5	144-10164	(1)	Mounting set Hydramatic pump
**	144-10095	(4)	Set connect Hydraman
**	144-10109	(4)	Set lift & drive Hydraman

* The oil and air ducts are not supplied by Versus-Omega
** Each cylinder must be combined with a set connect Hydraman or set lift & drive Hydraman.
These are not shown in the images.

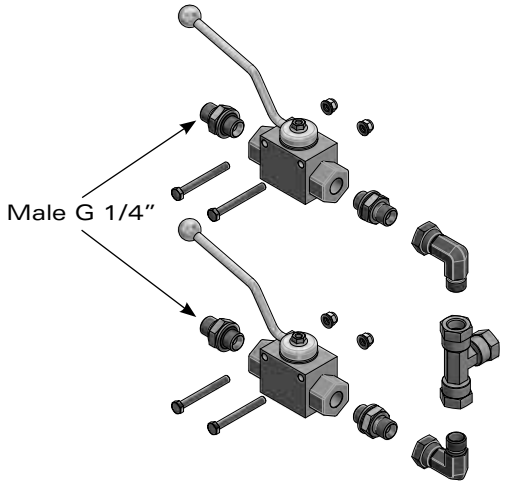

	PART NR.
Set connectors Hydramatic S2	804-06002

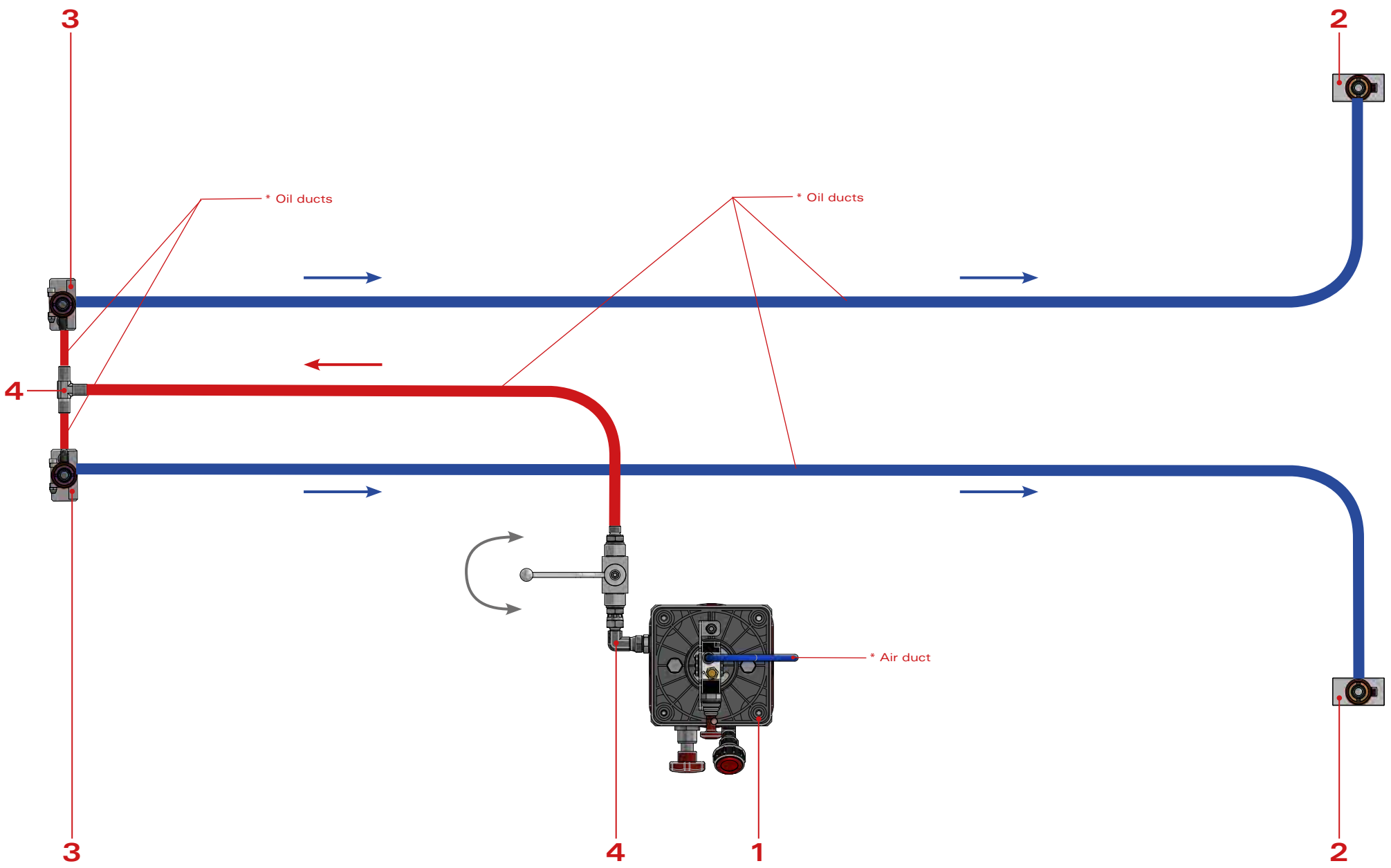
3
2
* Oil ducts
* Oil ducts
4
* Air duct
3
4
1
2

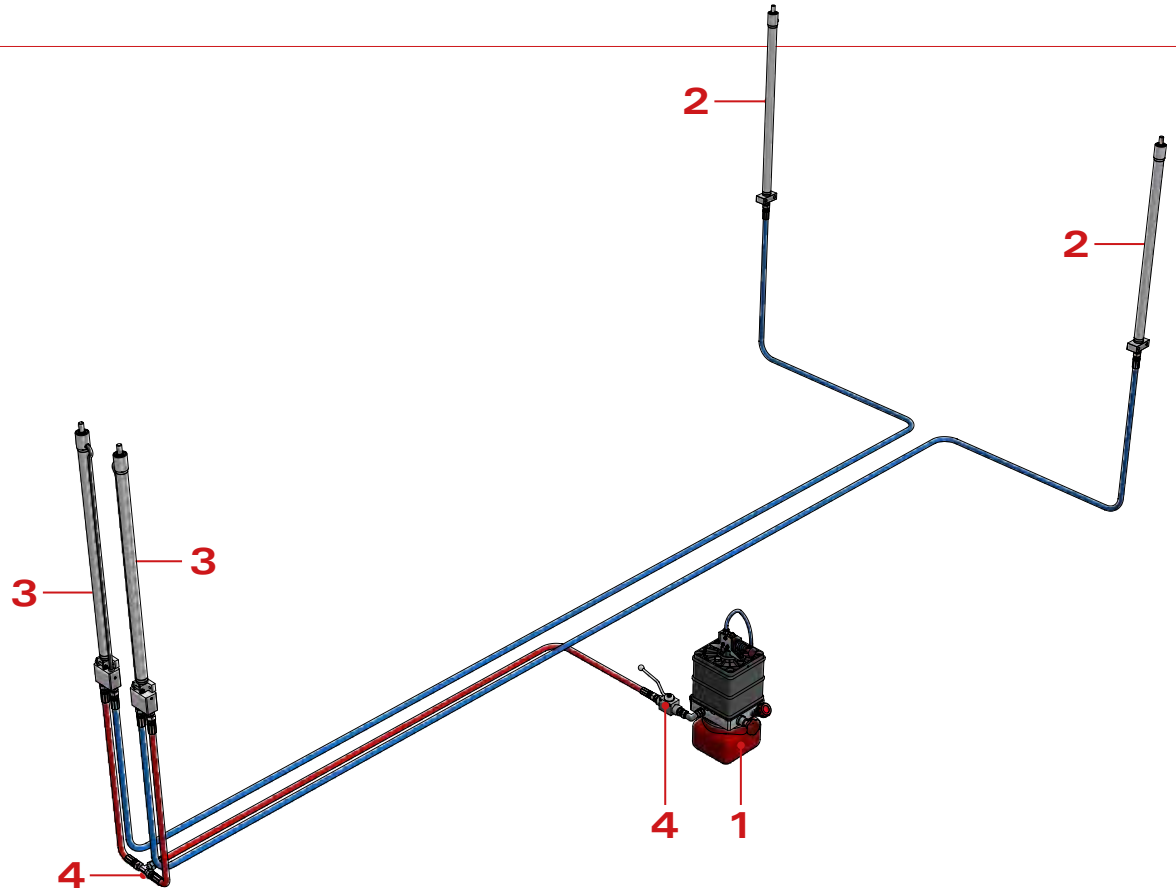

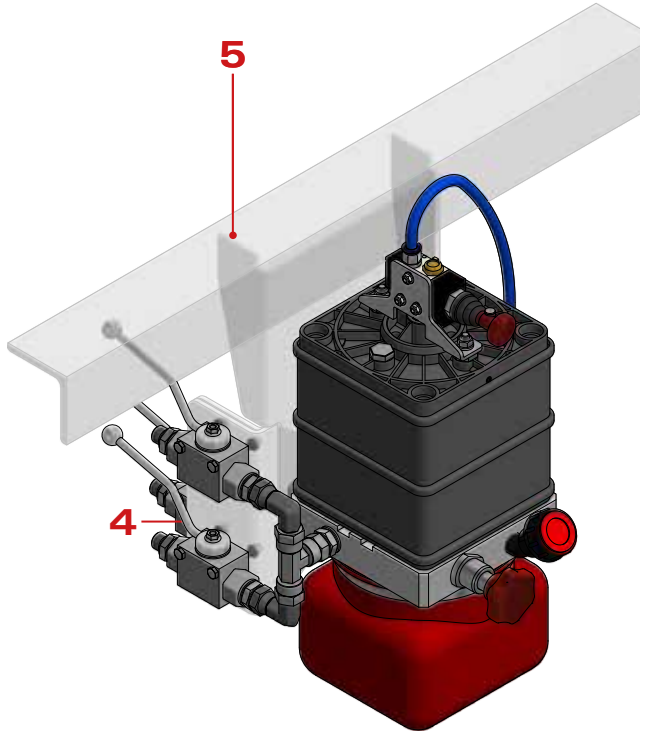

Nr.	Part Nr.	Qty	Description
1	802-01009	1	Pump-unit Hydramatic 1,5L
2	802-05004	2	Cylinder Hydramatic 500 SE
3	802-05005	2	Cylinder Hydramatic 500 DE
4	804-06003	1	Set connectors Hydramatic S3
5	144-10164	(1)	Mounting set Hydramatic pump
**	144-10095	(4)	Set connect Hydraman
**	144-10109	(4)	Set lift & drive Hydraman

* The oil and air ducts are not supplied by Versus-Omega
** Each cylinder must be combined with a set connect Hydraman or set lift & drive Hydraman.
These are not shown in the images.

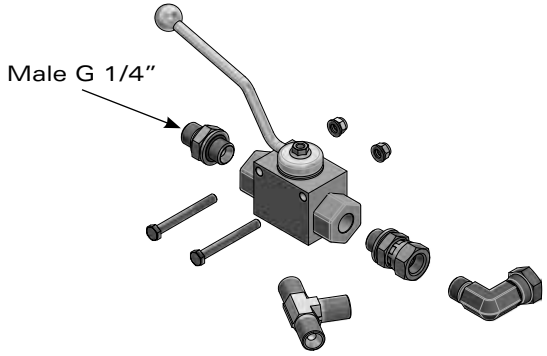

	PART NR.
Set connectors Hydramatic S3	804-06003

Set connect

Hydraman
+ set connect Hydraman

Hydratwin
+ set connect Hydratwin

Hydramatic cylinder 500SE
+ set connect Hydraman

Hydramatic cylinder 500DE
+ set connect Hydraman

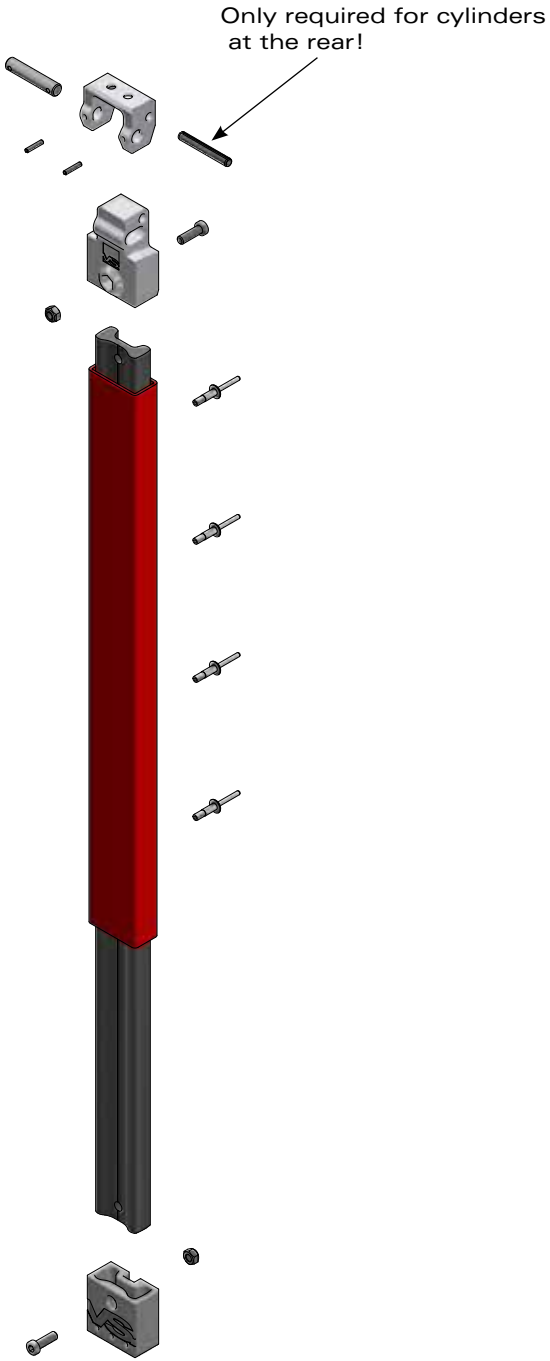

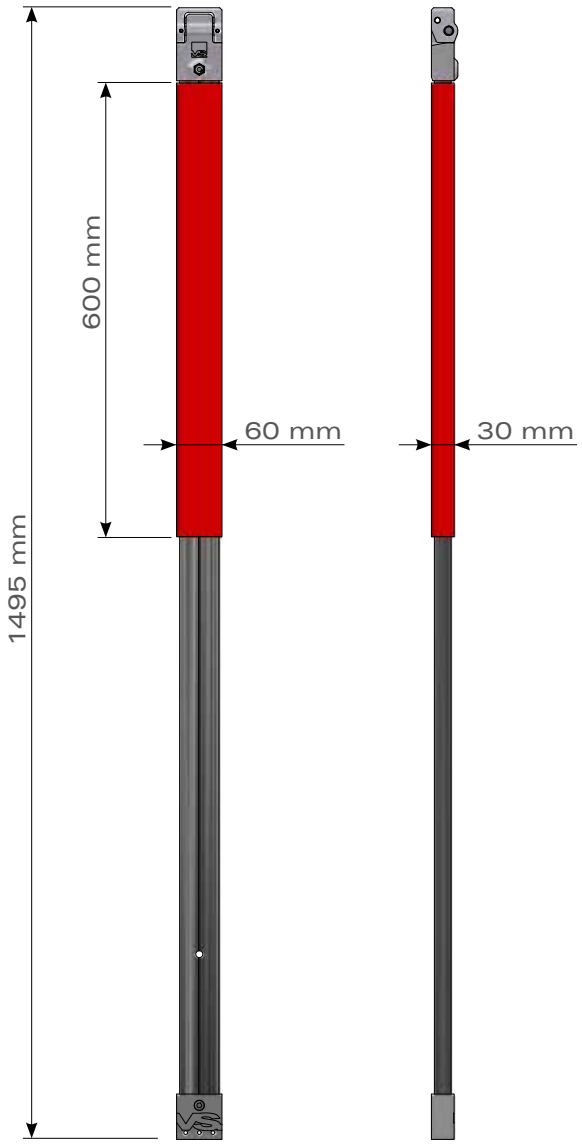

	PART NR.
Set connect Hydraman	144-10095
Set connect Hydratwin	144-10107

* The mounting parts for Hydraman (pump), Hydratwin (pump + cylinder) and Hydramatic (cylinders SE + DE) are not visible in the pictures.

Set lift & drive

Hydraman
+ set lift & drive Hydraman

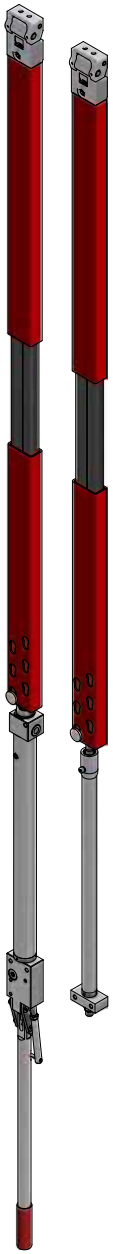

Hydratwin
+ set lift & drive Hydratwin

Hydramatic cylinder 500SE
+ set lift & drive Hydraman

Hydramatic cylinder 500DE
+ set lift & drive Hydraman

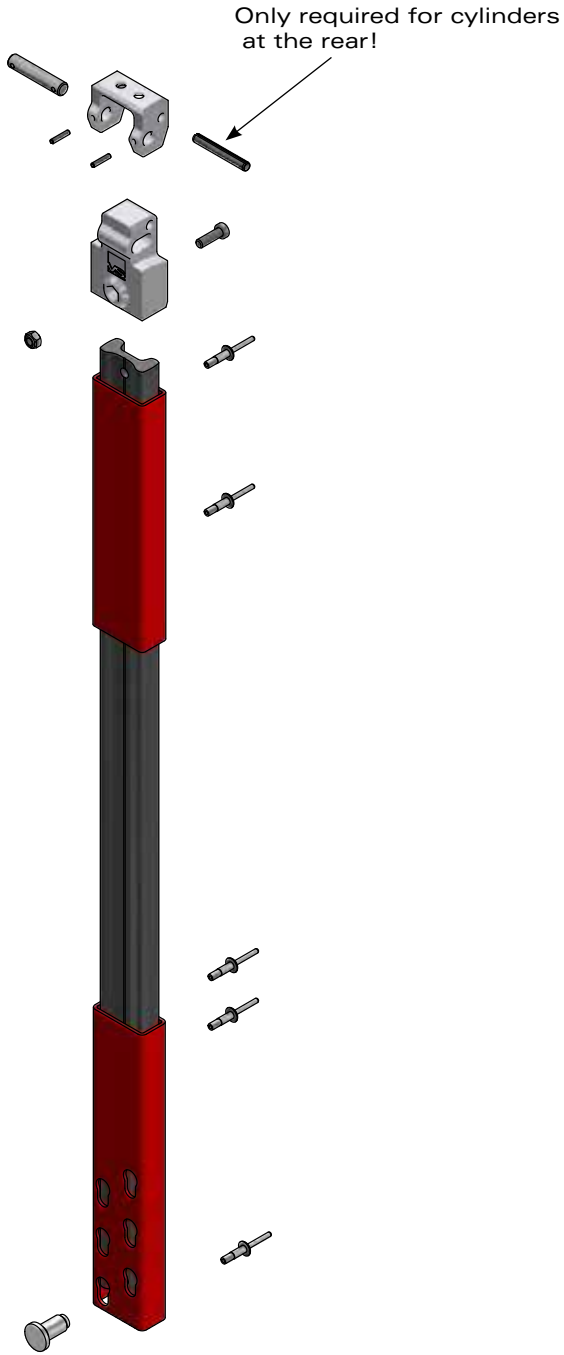

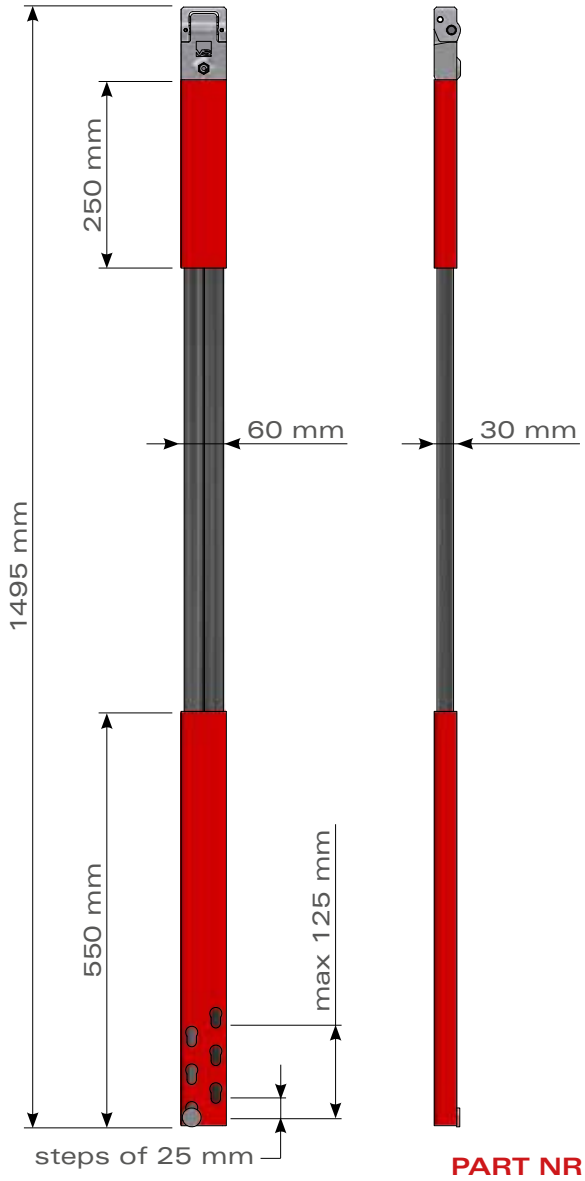

	PART NR.
Set lift & drive Hydraman	**144-10109**
Set lift & drive Hydratwin	**144-10113**

* The mounting parts for Hydraman (pump), Hydratwin (pump + cylinder) and Hydramatic (cylinders SE + DE) are not visible in the pictures.

VS
VS
VS
VS
VS
VS

penta
slider systems

Type of slider system	Page
Penta Wave	159
Penta Wave SR	165
Penta Wave Axces	171
Penta Wave SR Axces	177
Penta Wave Mega Axces	183
Penta City	189
Penta City 100	191
Penta City 200	197
Penta City 300	203
Penta Flex	209

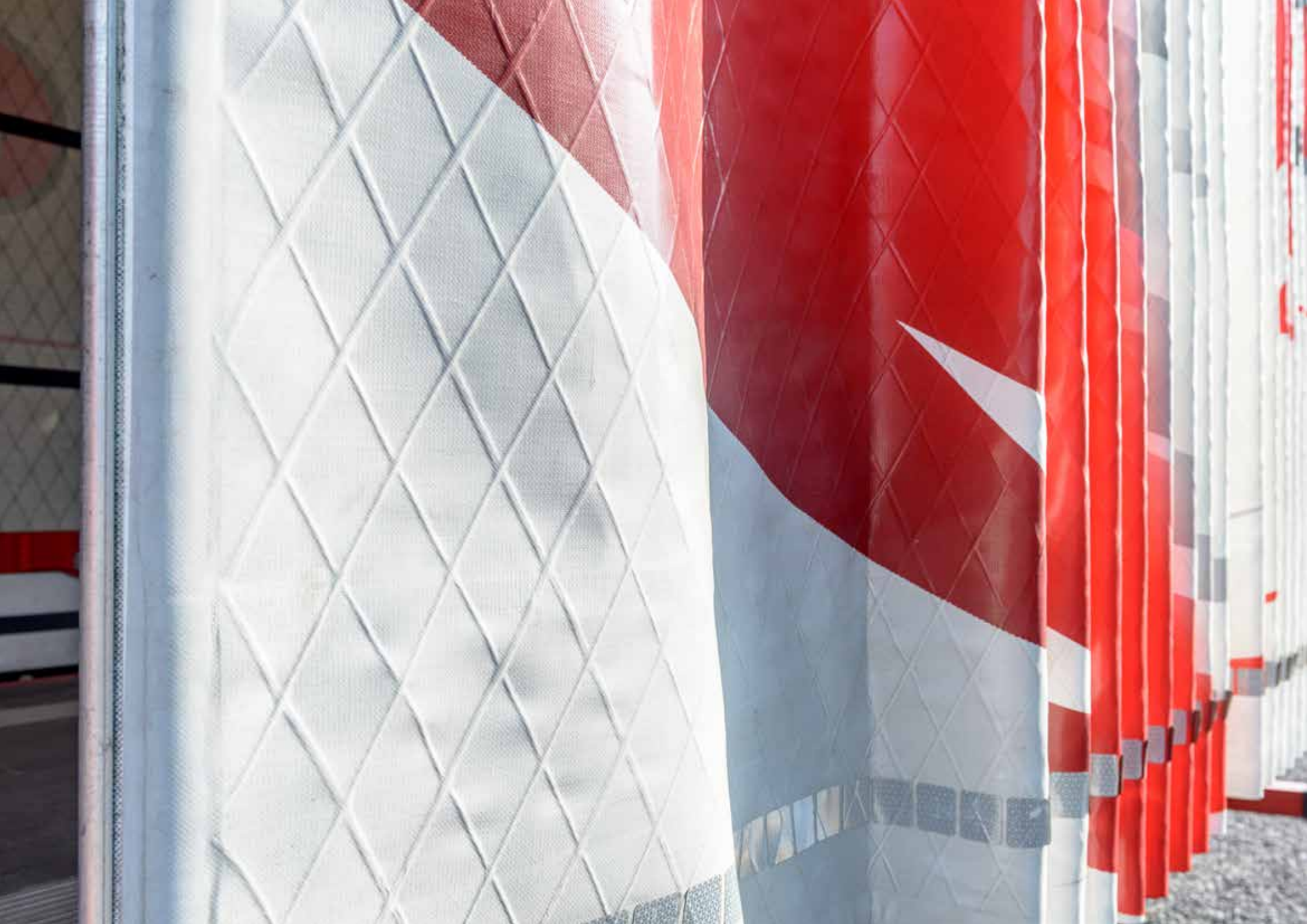

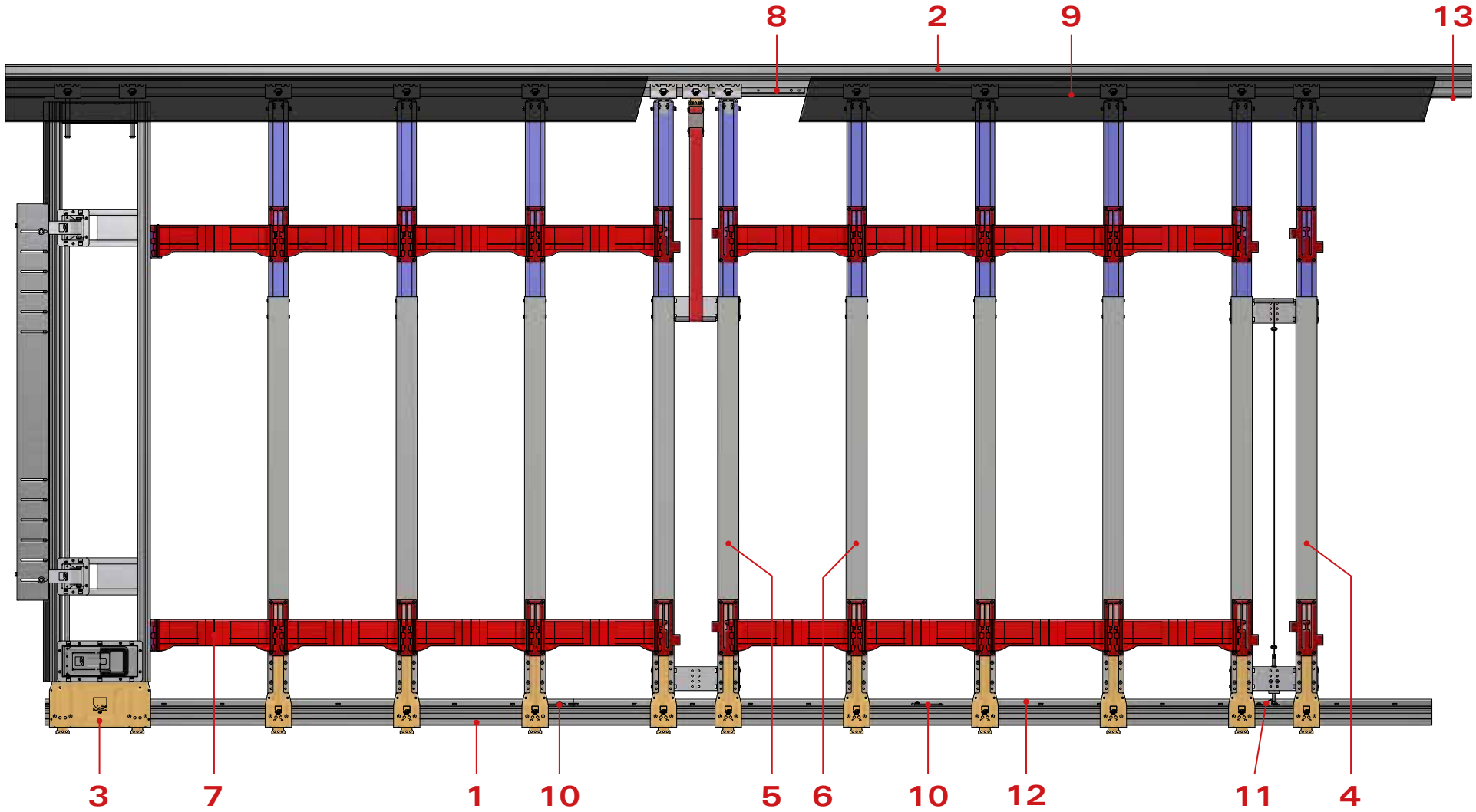

1	Penta Wave rail (Al)	8	Set steel insert
2	Duo Penta rail (Al)	9	PVC pelmet
3	Quick lock door	10	Set door stopper
4	Basic door	11	Set locking nose
5	Pillar	12	Set steel protection
6	Mini pillar	13	Set mounting plates
7	Folding plate	14*	Set fixation curtain

* Not visible on the composition drawing above

3 Quick lock door

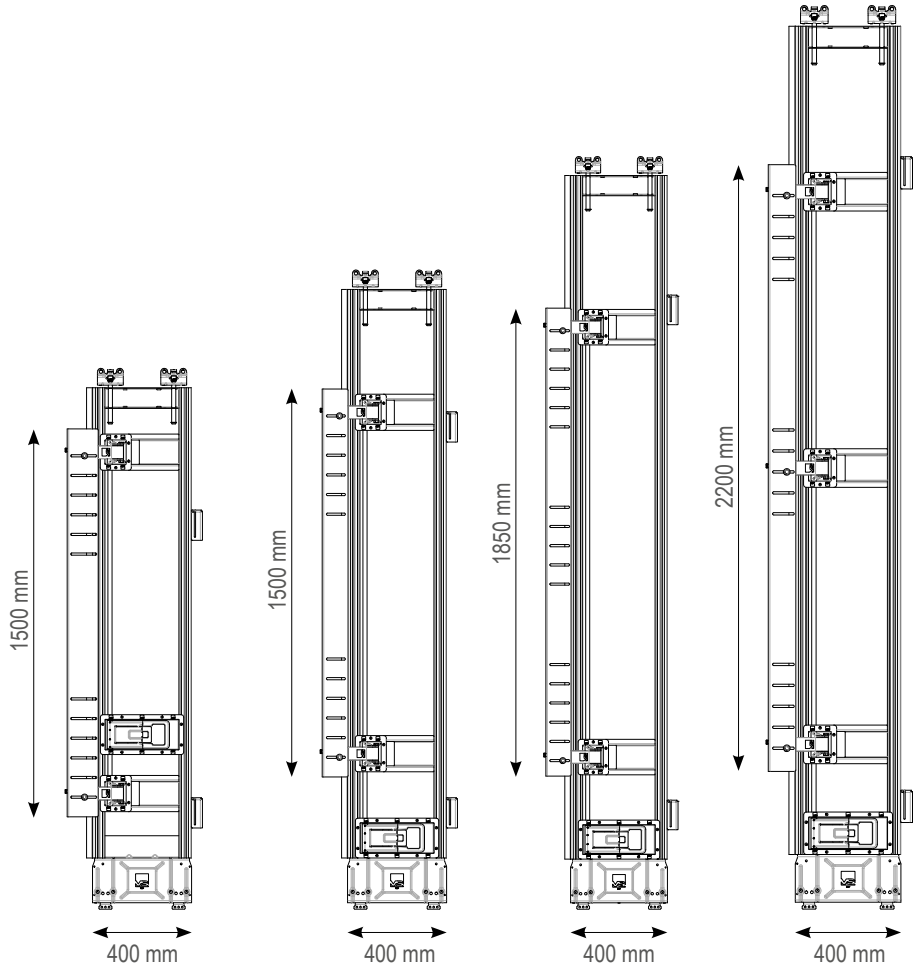

	PART NR.	PART NR.	PART NR.	PART NR.
Left SA	624-01112	624-01100	624-01101	624-01102
Right SA	624-01113	624-01103	624-01104	624-01105
Left LA	624-01114	624-01106	624-01107	624-01108
Right LA	624-01115	624-01109	624-01110	624-01111
	Extra Small 1920-2170mm	Small 2171-2420mm	Medium 2421-2800mm	Large 2801 -2950mm

Small arm (SA) = short hinge arm covering distance of 40 to 103mm
Large arm (LA) = long hinge arm covering distance of 103 to 190mm

4 Basic door

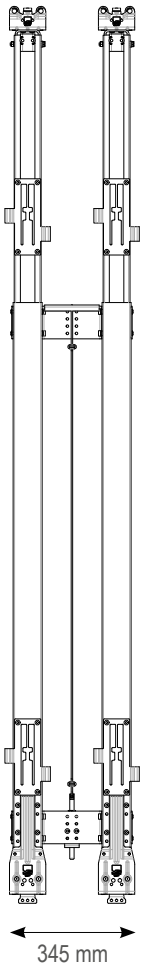

	PART NR.
XS	624-03023
S	624-03020
M	624-03021
L	624-03022

5 Pillar

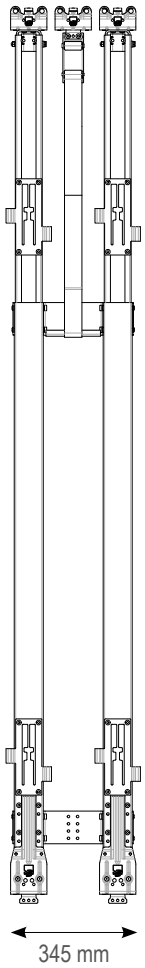

	PART NR.
XS	624-02027
S	624-02020
M	624-02021
L	624-02022

6 Mini pillar

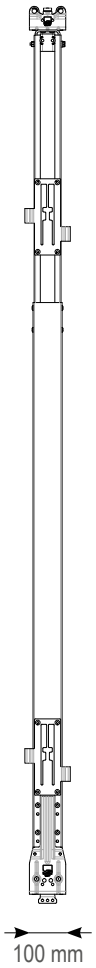

	PART NR.
XS	624-04023
S	624-04020
M	624-04021
L	624-04022

Extra Small (XS) = aperture height between 1920 and 2170mm
Small (S) = aperture height between 2171 and 2420mm
Medium (M) = aperture heigth between 2421 and 2700mm
Large (L) = aperture heigth between 2701 and 2950mm

1 Penta Wave rail (Al)

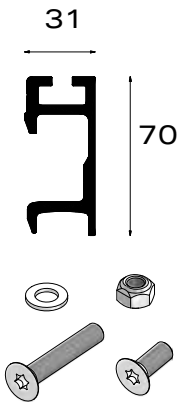

	PART NR.
Rail L = 7m	162-31700
Set (1set/m)	144-10126

2 Duo Penta rail (Al)

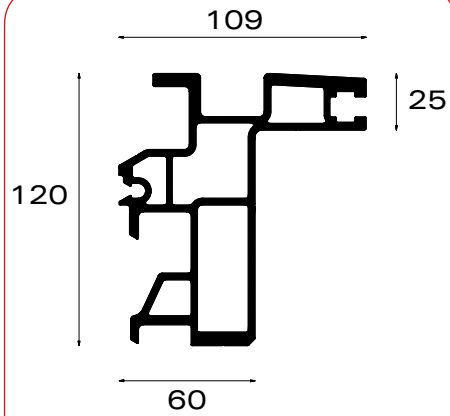

	PART NR.
L = 5m	162-30500
L = 7,8m	162-30780
L = 8,5m	162-30850
* L = 10,5m	162-30105
* L = 13,6m	162-30136

*profile with pre-bending

7 Folding plate

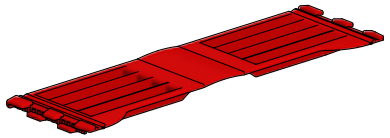

	PART NR.
Type 400	242-01034
Type 500	242-01035
Type 600	242-01036
Type 700	242-01037
Type 570	242-01038
Type 650	242-01039

8 Set steel insert

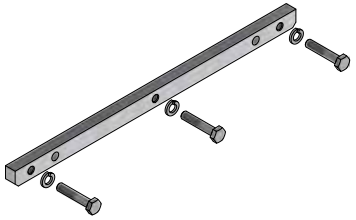

	PART NR.
Set	144-10119

Brush seal QL door

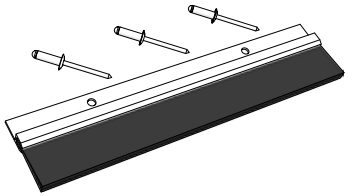

	PART NR.
Set	144-10157

14 Set fixation curtain

Set A

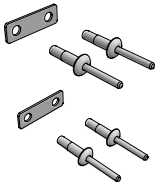

Set B

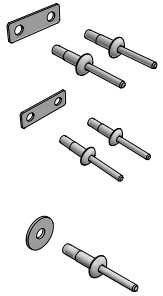

	PART NR.
Set A	144-10144
Set B	144-10140

*1x Set A / mini pillar
1x Set A / basic door
2x Set A / pillar
1x Set B / QL-door

Velcro strap

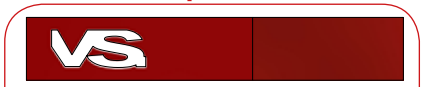

	PART NR.
L = 300mm	312-08001

10 Set door stopper

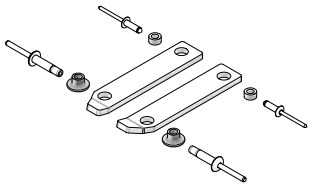

	PART NR.
Left	144-10122
Right	144-10123

11 Set locking nose

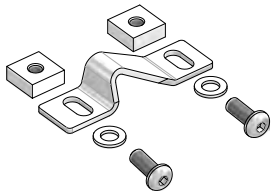

	PART NR.
Set	144-10146

12 Set steel protection

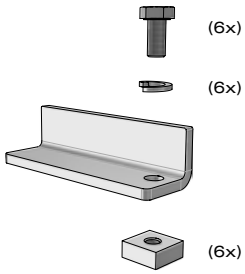

	PART NR.
Rail L = 2m	152-50002
Set (1/rail)	144-10116

13 Set mounting plates

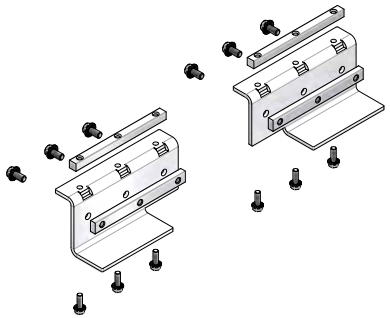

	PART NR.
Set	154-03101

9 PVC pelmet

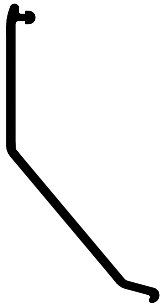

	PART NR.
L = 9m (black)	242-12109
L = 14m (black)	242-12114

pentanave®
www.koegel.com

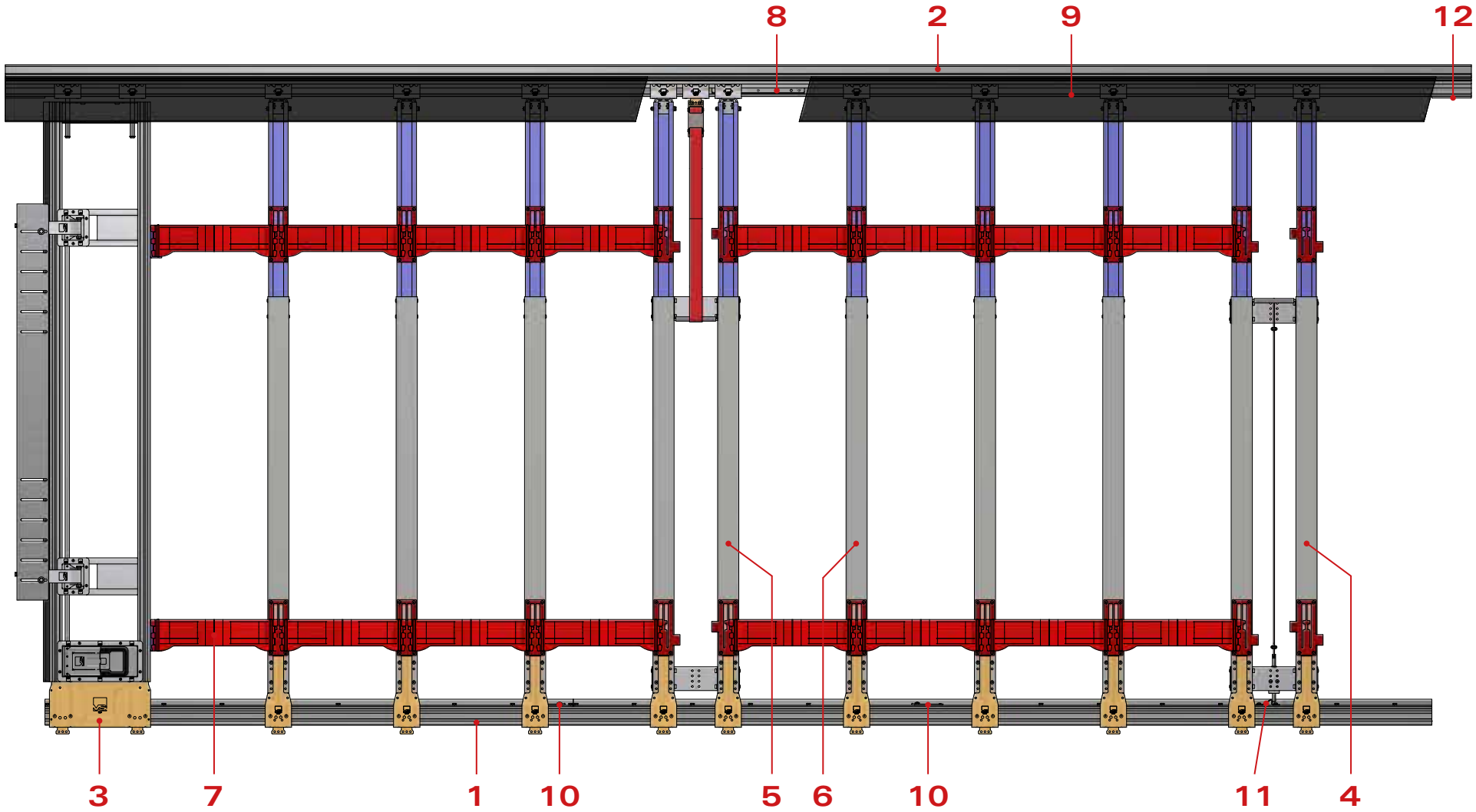

1	Penta Wave rail (SS)
2	Duo Penta rail (Al)
3	Quick lock door
4	Basic door
5	Pillar
6	Mini pillar
7	Folding plate

8	Set steel insert
9	PVC pelmet
10	Set door stopper
11	Set locking nose
12	Set mounting plates
13*	Set fixation curtain

* Not visible on the composition drawing above

3 Quick lock door

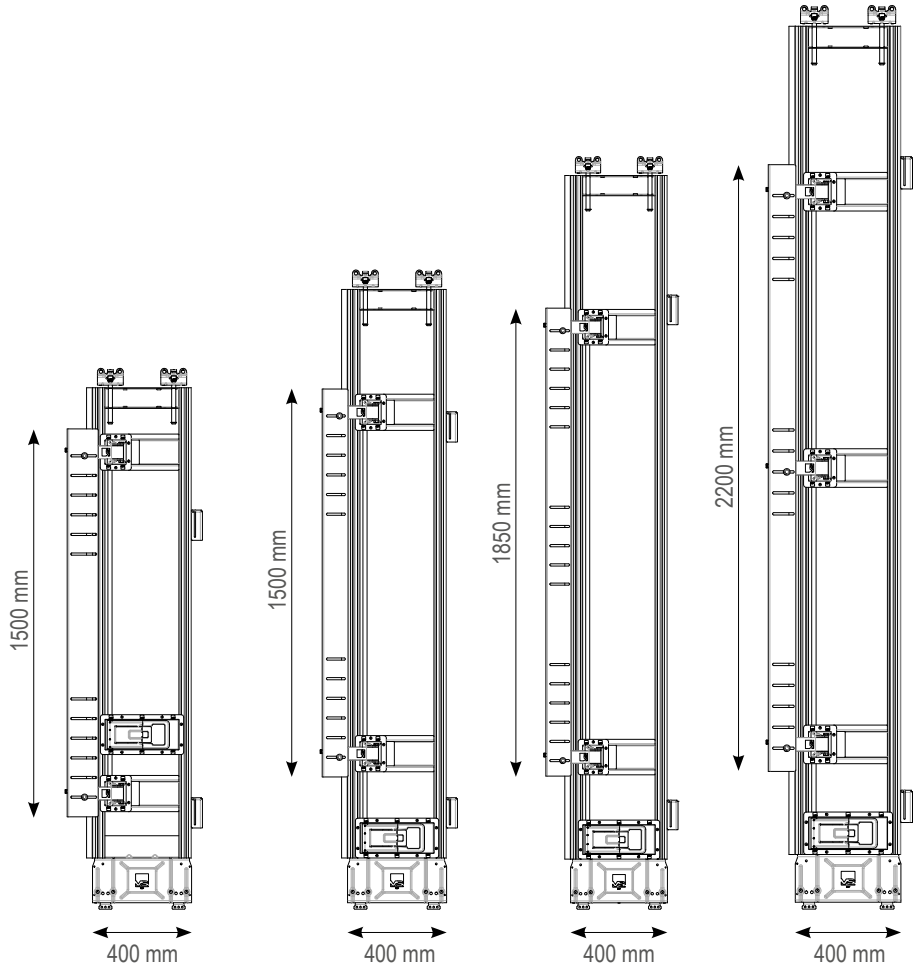

	PART NR.	PART NR.	PART NR.	PART NR.
Left SA	624-01612	624-01600	624-01601	624-01602
Right SA	624-01613	624-01603	624-01604	624-01605
Left LA	624-01614	624-01606	624-01607	624-01608
Right LA	624-01615	624-01609	624-01610	624-01611
	Extra Small 1920-2170mm	Small 2171-2420mm	Medium 2421-2800mm	Large 2801 -2950mm

Small arm (SA) = short hinge arm covering distance of 40 to 103mm
Large arm (LA) = long hinge arm covering distance of 103 to 190mm

4 Basic door

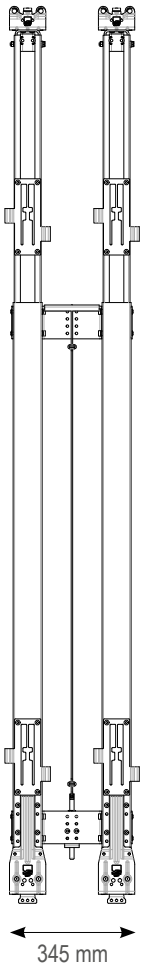

	PART NR.
XS	624-03623
S	624-03620
M	624-03621
L	624-03622

5 Pillar

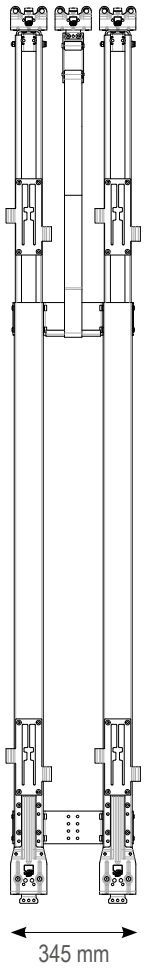

	PART NR.
XS	624-02627
S	624-02620
M	624-02621
L	624-02622

6 Mini pillar

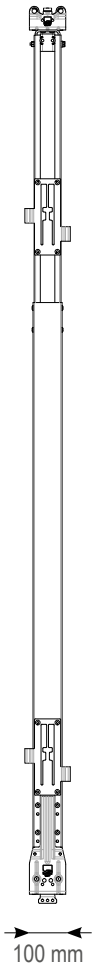

	PART NR.
XS	624-04623
S	624-04620
M	624-04621
L	624-04622

Extra Small (XS) = aperture height between 1920 and 2170mm
Small (S) = aperture height between 2171 and 2420mm
Medium (M) = aperture heigth between 2421 and 2700mm
Large (L) = aperture heigth between 2701 and 2950mm

1 Penta Wave rail (SS)

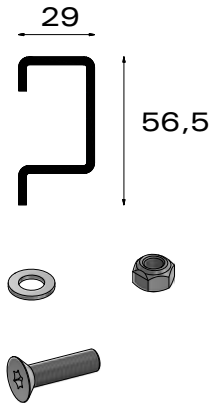

	PART NR.
Rail L = 3m	162-44304
Set (1/rail)	144-10150

*stainless steel rail

2 Duo Penta rail (Al)

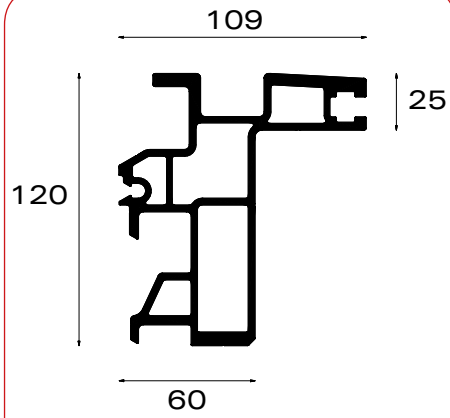

	PART NR.
L = 5m	162-30500
L = 7,8m	162-30780
L = 8,5m	162-30850
* L = 10,5m	162-30105
* L = 13,6m	162-30136

*profile with pre-bending

7 Folding plate

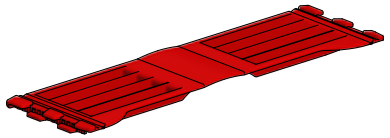

	PART NR.
Type 400	242-01034
Type 500	242-01035
Type 600	242-01036
Type 700	242-01037
Type 570	242-01038
Type 650	242-01039

8 Set steel insert

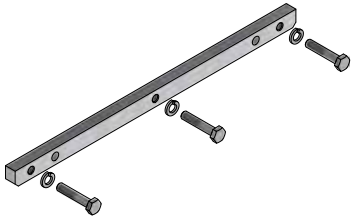

	PART NR.
Set	144-10119

Brush seal QL door

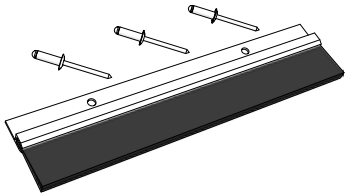

	PART NR.
Set	144-10157

13 Set fixation curtain

Set A

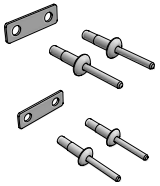

Set B

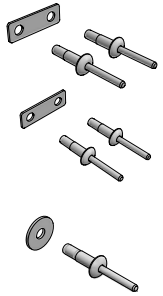

	PART NR.
Set A	144-10144
Set B	144-10140

*1x Set A / mini pillar
1x Set A / basic door
2x Set A / pillar
1x Set B / QL-door

Velcro strap

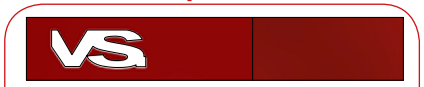

	PART NR.
L = 300mm	312-08001

10 Set door stopper

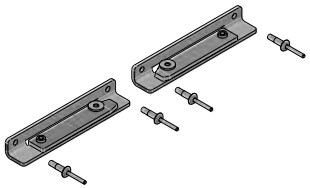

	PART NR.
Left	144-10171
Right	144-10172

11 Set locking nose

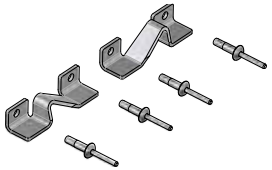

	PART NR.
Left	144-10177
Right	144-10178

12 Set mounting plates

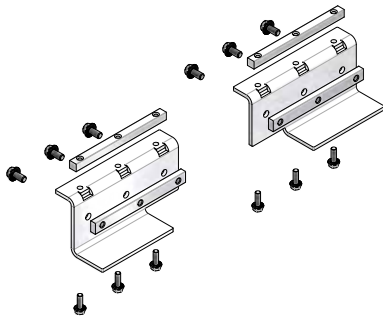

	PART NR.
Set	154-03101

9 PVC pelmet

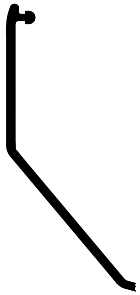

	PART NR.
L = 9m (black)	242-12109
L = 14m (black)	242-12114

pentawave®
www.koegel.com

pentawave

slider systems by versus

axces

lifting systems

LecTira

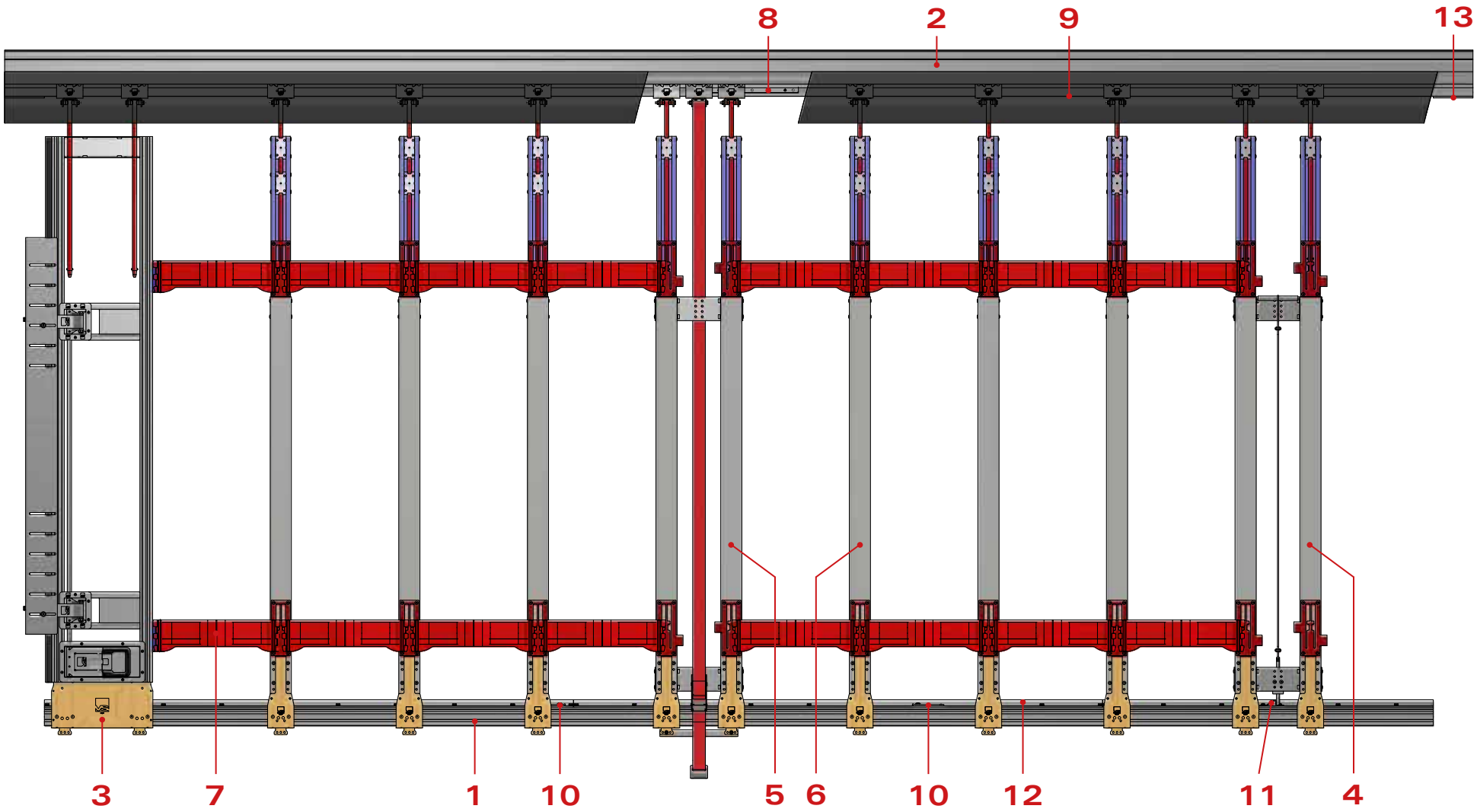

1	Penta Wave rail (Al)	8	Set steel insert
2	Alto Penta rail (Al)	9	PVC pelmet
3	Quick lock door	10	Set door stopper
4	Basic door	11	Set locking nose
5	Pillar	12	Set steel protection
6	Mini pillar	13	Set mounting plates
7	Folding plate	14*	Set fixation curtain

* Not visible on the composition drawing above

3 Quick lock door

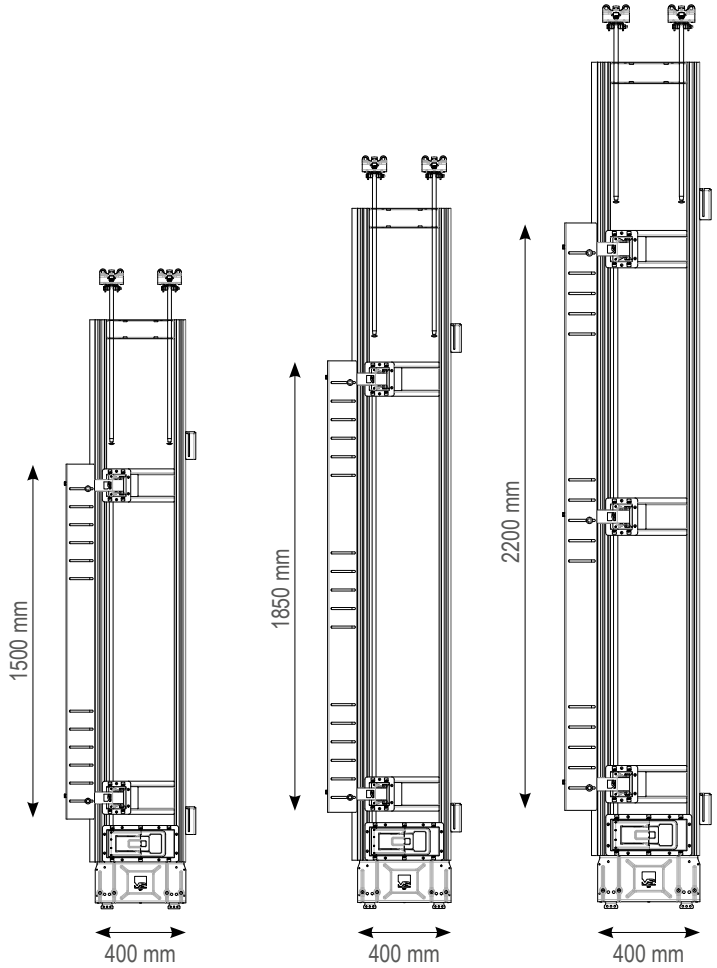

	PART NR.	PART NR.	PART NR.
Left SA	624-01500	624-01501	624-01502
Right SA	624-01503	624-01504	624-01505
Left LA	624-01506	624-01507	624-01508
Right LA	624-01509	624-01510	624-01511
	Small 2200-2480mm	Medium 2481-2800mm	Large 2801-2950mm

Small arm (SA) = short hinge arm covering distance of 40 to 103mm
Large arm (LA) = long hinge arm covering distance of 103 to 190mm

4 Basic door

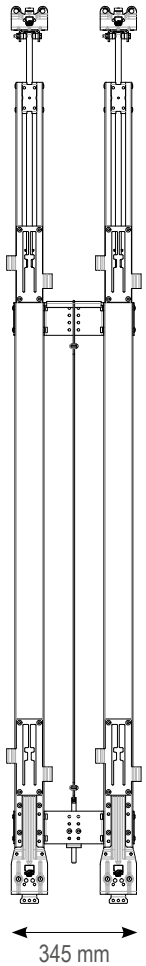

	PART NR.
S	624-03520
M	624-03521
L	624-03522

Set tension belt

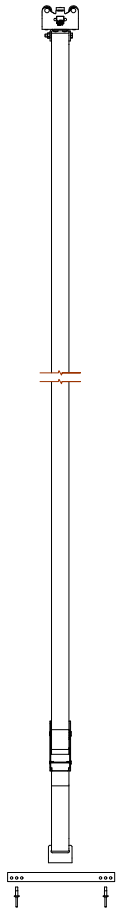

	PART NR.
Set	144-10173

* Used in basic door when no Quick lock door in front

5 Pillar

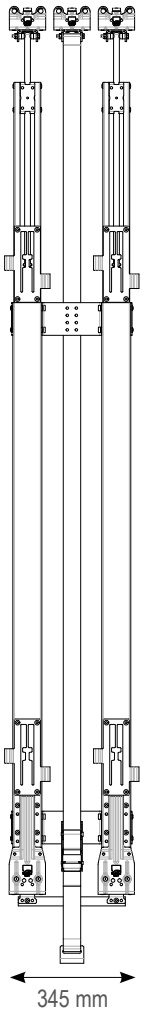

	PART NR.
S	624-02520
M	624-02521
L	624-02522

6 Mini pillar

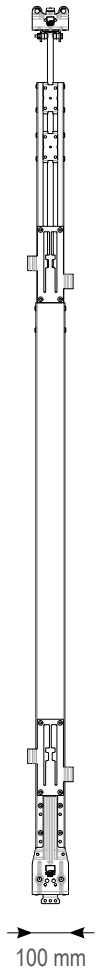

	PART NR.
S	624-04520
M	624-04521
L	624-04522

Small (S) = aperture height between 2200 and 2480mm
Medium (M) = aperture heigth between 2481 and 2700mm
Large (L) = aperture heigth between 2701 and 2950mm

1 Penta Wave rail (Al)

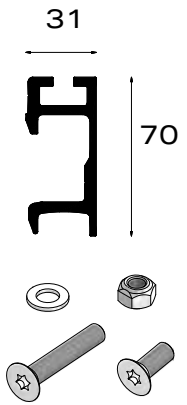

	PART NR.
Rail L = 7m	162-31700
Set (1set/m)	144-10126

Velcro strap

	PART NR.
L = 300mm	312-08001

10 Set door stopper

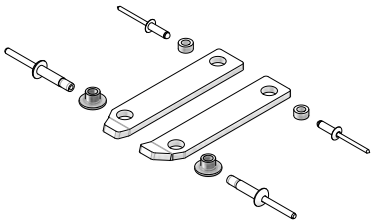

	PART NR.
Left	144-10122
Right	144-10123

2 Alto Penta rail (Al)

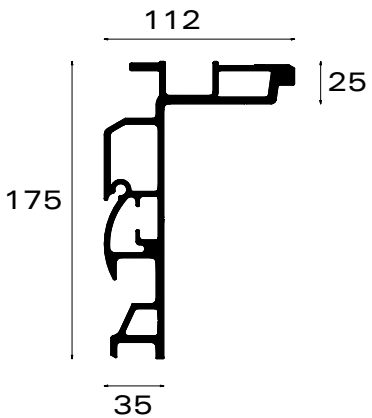

	PART NR.
L = 7,8m	162-37780
L = 8,5m	162-37850
* L = 13,6m	162-37136

*profile with pre-bending

11 Set locking nose

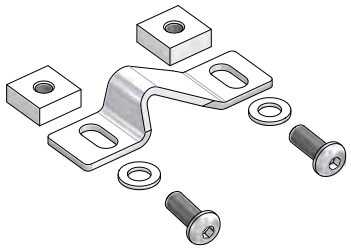

	PART NR.
Set	144-10146

7 Folding plate

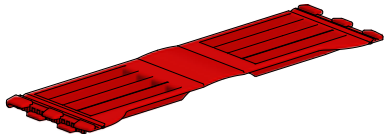

	PART NR.
Type 400	242-01034
Type 500	242-01035
Type 600	242-01036
Type 700	242-01037
Type 570	242-01038
Type 650	242-01039

12 Set steel protection

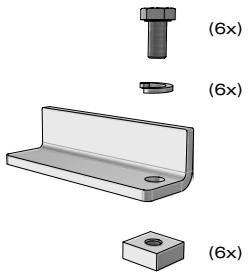

	PART NR.
Rail L = 2m	152-50002
Set (1/rail)	144-10116

8 Set steel insert

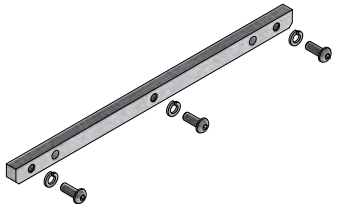

	PART NR.
Set	144-10119

Brush seal QL door

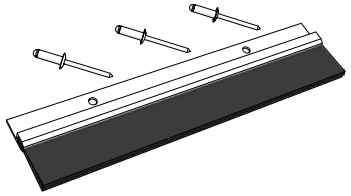

	PART NR.
Set	144-10157

13 Set mounting plates

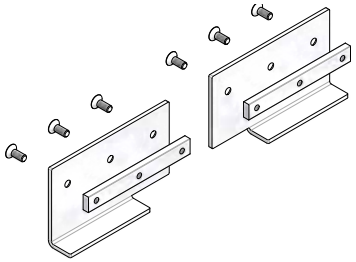

	PART NR.
Set	154-03100

14 Set fixation curtain

Set A

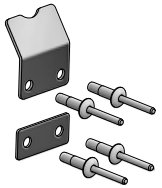

Set B

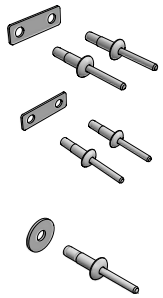

	PART NR.
Set A	144-10145
Set B	144-10140

*1x Set A / mini pillar
1x Set A / basic door
2x Set A / pillar
1x Set B / QL-door

9 PVC pelmet (black)

	PART NR.
L = 9m	242-16109
L = 14m	242-16114

pentawave SR

slider systems by versus

axces

lifting systems

pentawave®
slider systems by versus
SCHWARZMÜLLER

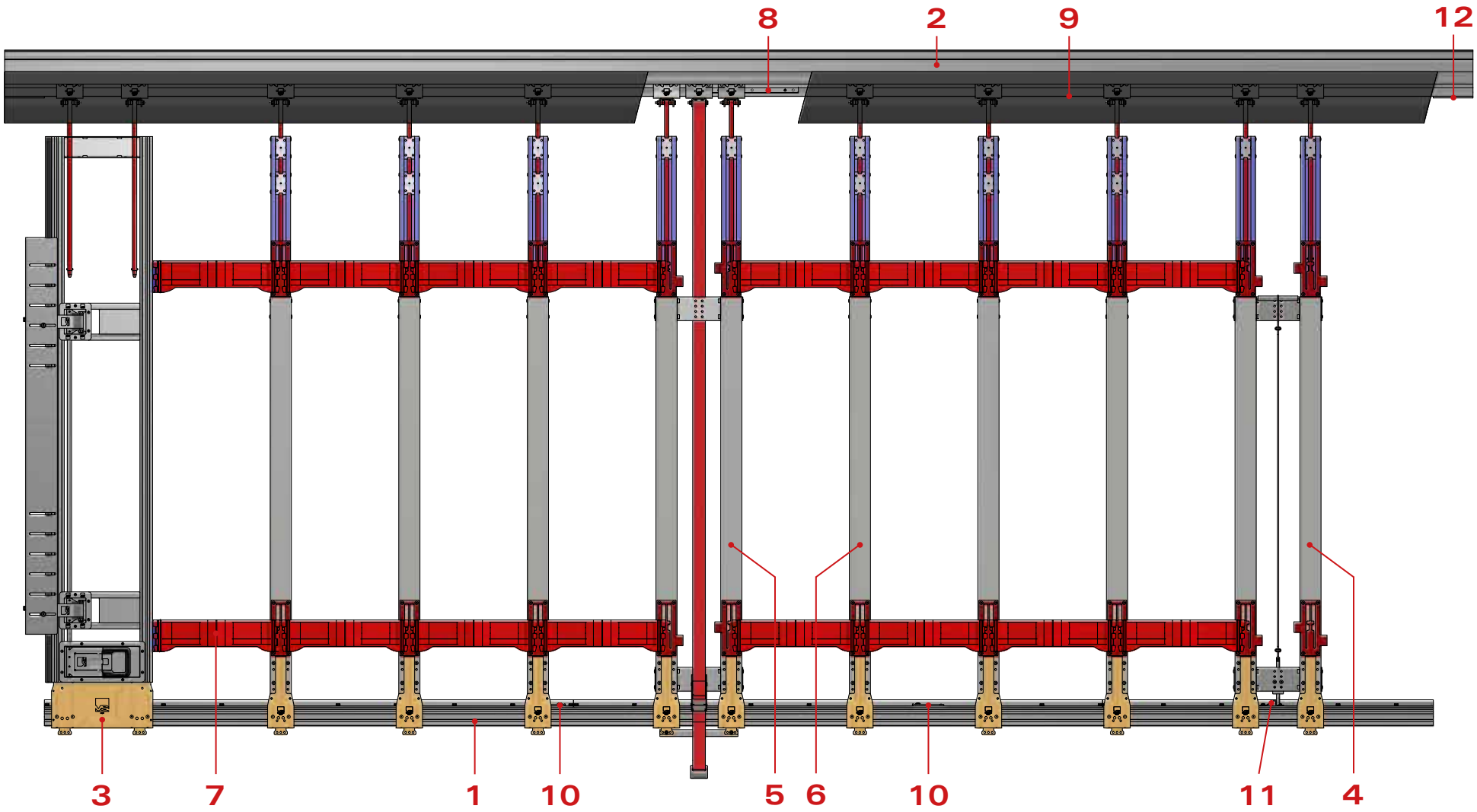

1	Penta Wave rail (SS)
2	Alto Penta rail (Al)
3	Quick lock door
4	Basic door
5	Pillar
6	Mini pillar
7	Folding plate

8	Set steel insert
9	PVC pelmet
10	Set door stopper
11	Set locking nose
12	Set mounting plates
13*	Set fixation curtain

* Not visible on the composition drawing above

3 Quick lock door

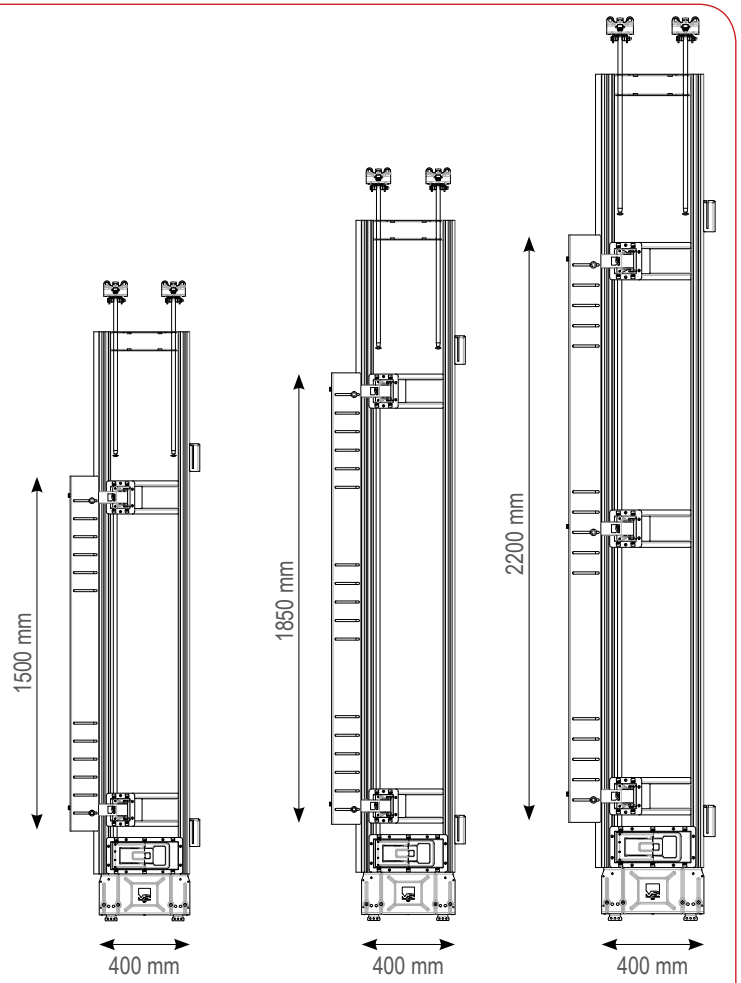

	PART NR.	PART NR.	PART NR.
Left SA	624-01700	624-01701	624-01702
Right SA	624-01703	624-01704	624-01705
Left LA	624-01706	624-01707	624-01708
Right LA	624-01709	624-01710	624-01711
	Small 2200-2480mm	Medium 2481-2800mm	Large 2801-2950mm

Small arm (SA) = short hinge arm covering distance of 40 to 103mm
Large arm (LA) = long hinge arm covering distance of 103 to 190mm

4 Basic door

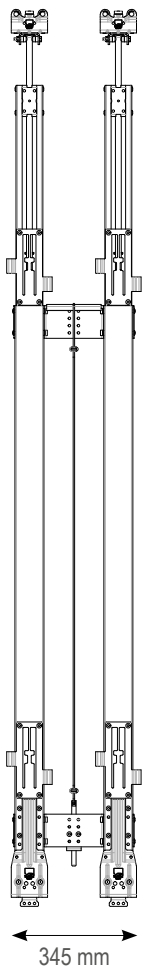

	PART NR.
S	624-03720
M	624-03721
L	624-03722

Set tension belt

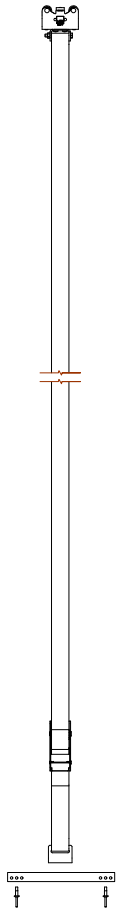

	PART NR.
Set	144-10173

* Used in basic door when no Quick lock door in front

5 Pillar

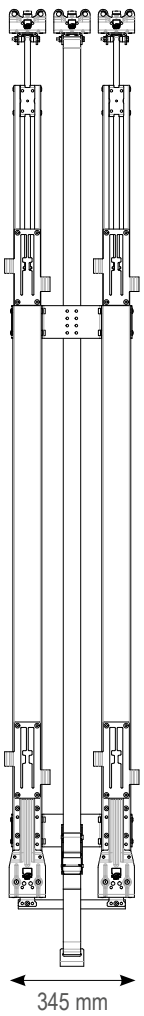

	PART NR.
S	624-02720
M	624-02721
L	624-02722

6 Mini pillar

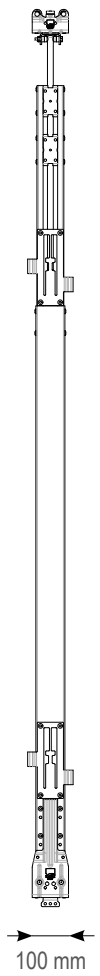

	PART NR.
S	624-04720
M	624-04721
L	624-04722

Small (S) = aperture height between 2200 and 2480mm
Medium (M) = aperture heigth between 2481 and 2700mm
Large (L) = aperture heigth between 2701 and 2950mm

1 Penta Wave rail (SS)

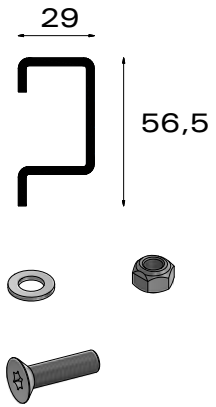

	PART NR.
Rail L = 3m	162-44304
Set (1/rail)	144-10150

*stainless steel rail

2 Alto Penta rail (Al)

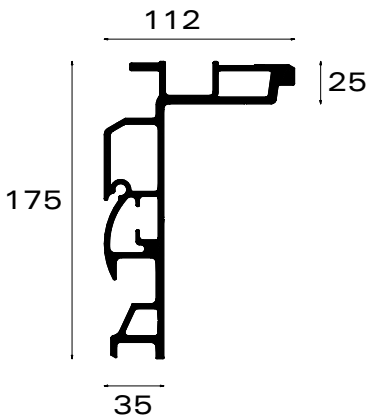

	PART NR.
L = 7,8m	162-37780
L = 8,5m	162-37850
* L = 13,6m	162-37136

*profile with pre-bending

7 Folding plate

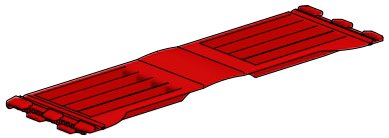

	PART NR.
Type 400	242-01034
Type 500	242-01035
Type 600	242-01036
Type 700	242-01037
Type 570	242-01038
Type 650	242-01039

8 Set steel insert

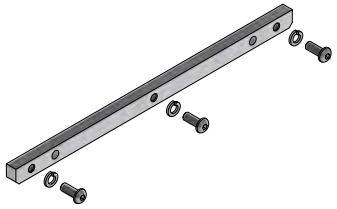

	PART NR.
Set	144-10119

Brush seal QL door

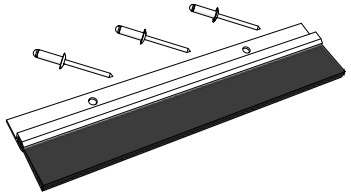

	PART NR.
Set	144-10157

14 Set fixation curtain

Set A

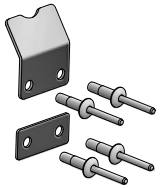

Set B

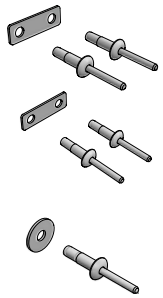

	PART NR.
Set A	144-10145
Set B	144-10140

*1x Set A / mini pillar
1x Set A / basic door
2x Set A / pillar
1x Set B / QL-door

Velcro strap

	PART NR.
L = 300mm	312-08001

10 Set door stopper

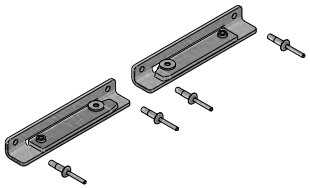

	PART NR.
Left	144-10171
Right	144-10172

11 Set locking nose

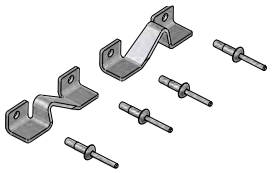

	PART NR.
Left	144-10177
Right	144-10178

13 Set mounting plates

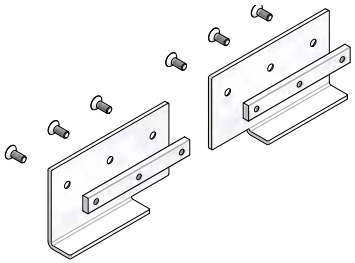

	PART NR.
Set	154-03100

9 PVC pelmet (black)

	PART NR.
L = 9m	242-16109
L = 14m	242-16114

Seifert
LOGISTICS GROUP
seifert
KRONE

pentawave

slider systems by versus

megaaxces

lifting systems by versus

SCHWARZMÜLLER

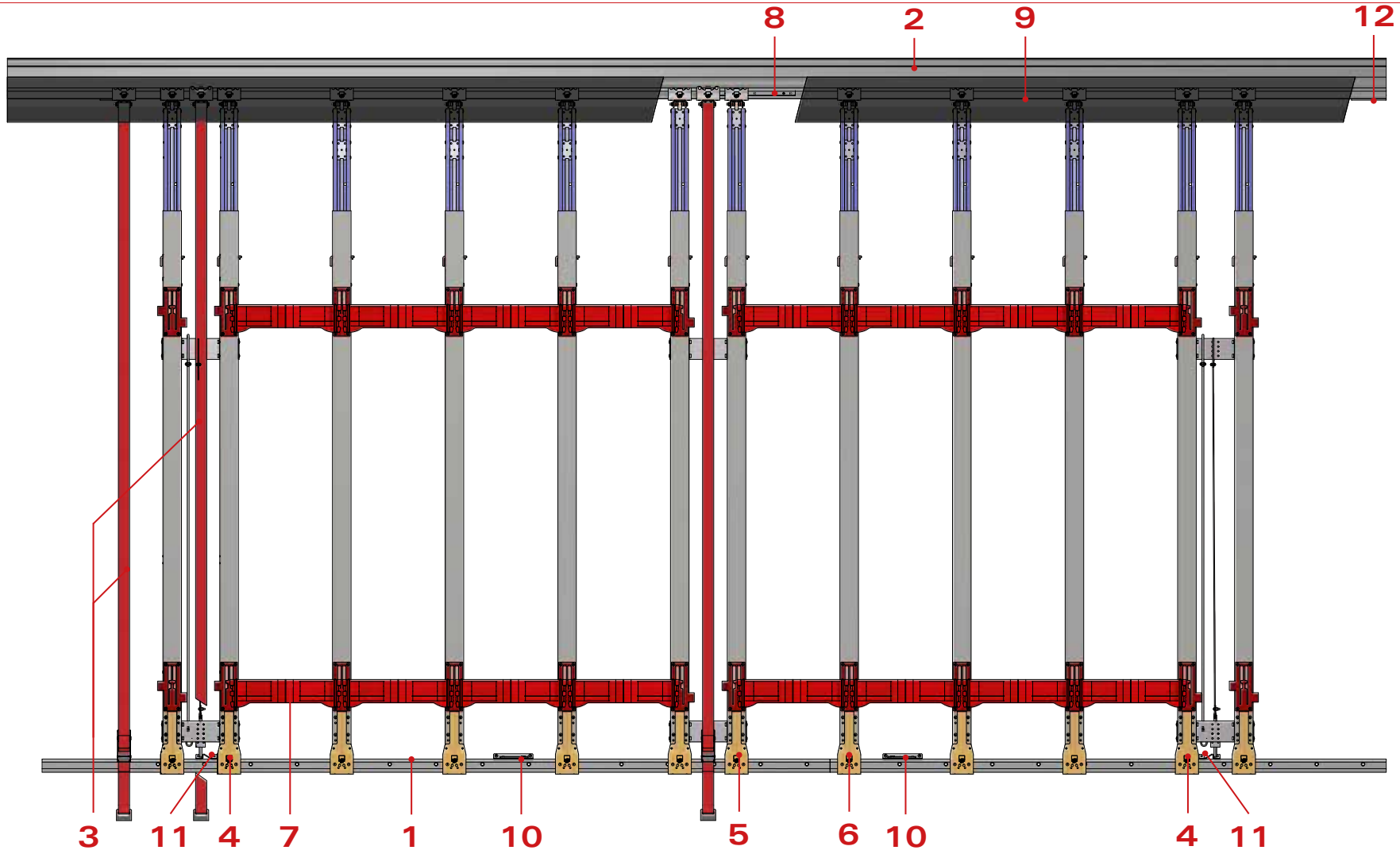

1	Penta Wave rail (SS)
2	Alto Penta rail (Al)
3	Set tension belt
4	Basic door
5	Pillar
6	Mini pillar
7	Folding plate

8	Set steel insert
9	PVC pelmet
10	Set door stopper
11	Set locking nose
12	Set mounting plates
13*	Set fixation curtain

* Not visible on the composition drawing above

3 Set tension belt

PART NR.

144-10173

2x / system

4 Basic door

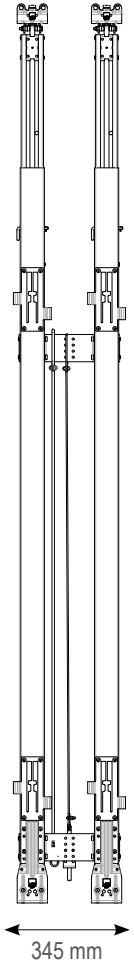

PART NR.

624-03100

5 Pillar

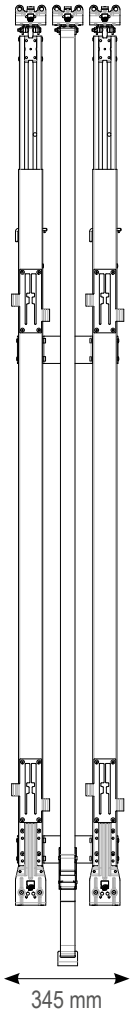

PART NR.

624-02100

6 Mini pillar

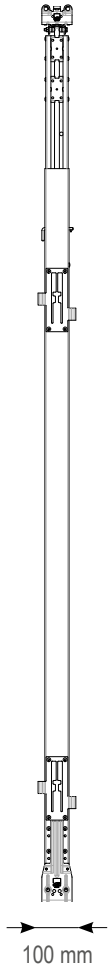

PART NR.

624-04100

1 Penta Wave rail (SS)

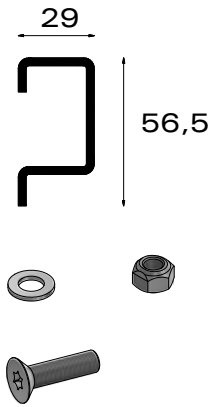

	PART NR.
Rail L = 3m	162-44304
Set (1/rail)	144-10150

*stainless steel rail

2 Alto Penta rail (Al)

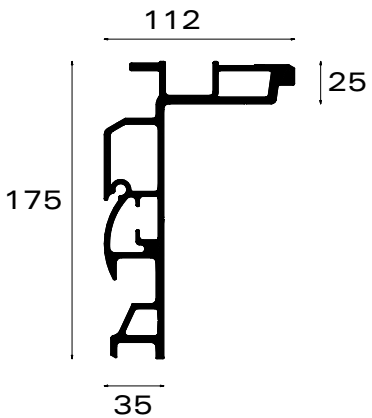

	PART NR.
L = 7,8m	162-37780
L = 8,5m	162-37850
* L = 13,6m	162-37136

*profile with pre-bending & milling

7 Folding plate

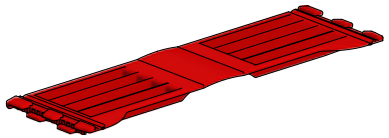

	PART NR.
Type 400	242-01034
Type 500	242-01035
Type 600	242-01036
Type 700	242-01037
Type 570	242-01038
Type 650	242-01039

8 Set steel insert

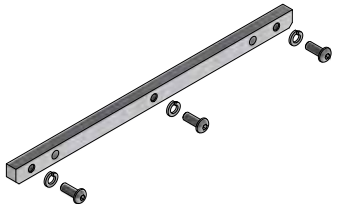

	PART NR.
Set	144-10119

Set operating lever

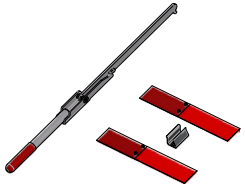

	PART NR.
Set	144-10180

13 Set fixation curtain

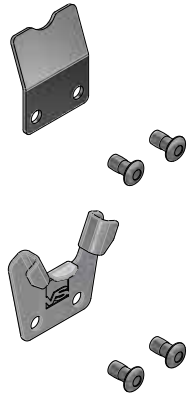

	PART NR.
Set	144-10163

Velcro strap

	PART NR.
L = 300mm	312-08001

12 Set mounting plates

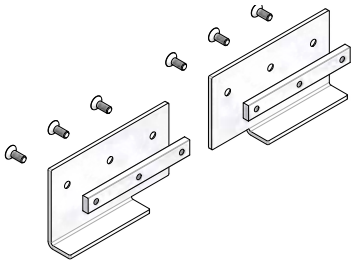

	PART NR.
Set	154-03100

9 PVC pelmet (black)

	PART NR.
L = 9m	242-16109
L = 14m	242-16114

10 Set door stopper

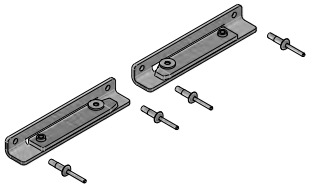

	PART NR.
Left	144-10171
Right	144-10172

11 Set locking nose

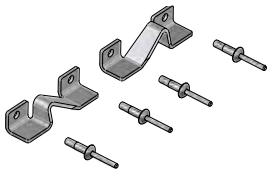

	PART NR.
Left	144-10177
Right	144-10178

pentacity®
slider systems by versus
quick and safe through town

ไทยเบฟเวอเรจ โลจิสติก
TBL
Thai Beverage Logistics
ThaiBev
FVM 240
TBL

TBL
Thai Beverage Logistics
TBL

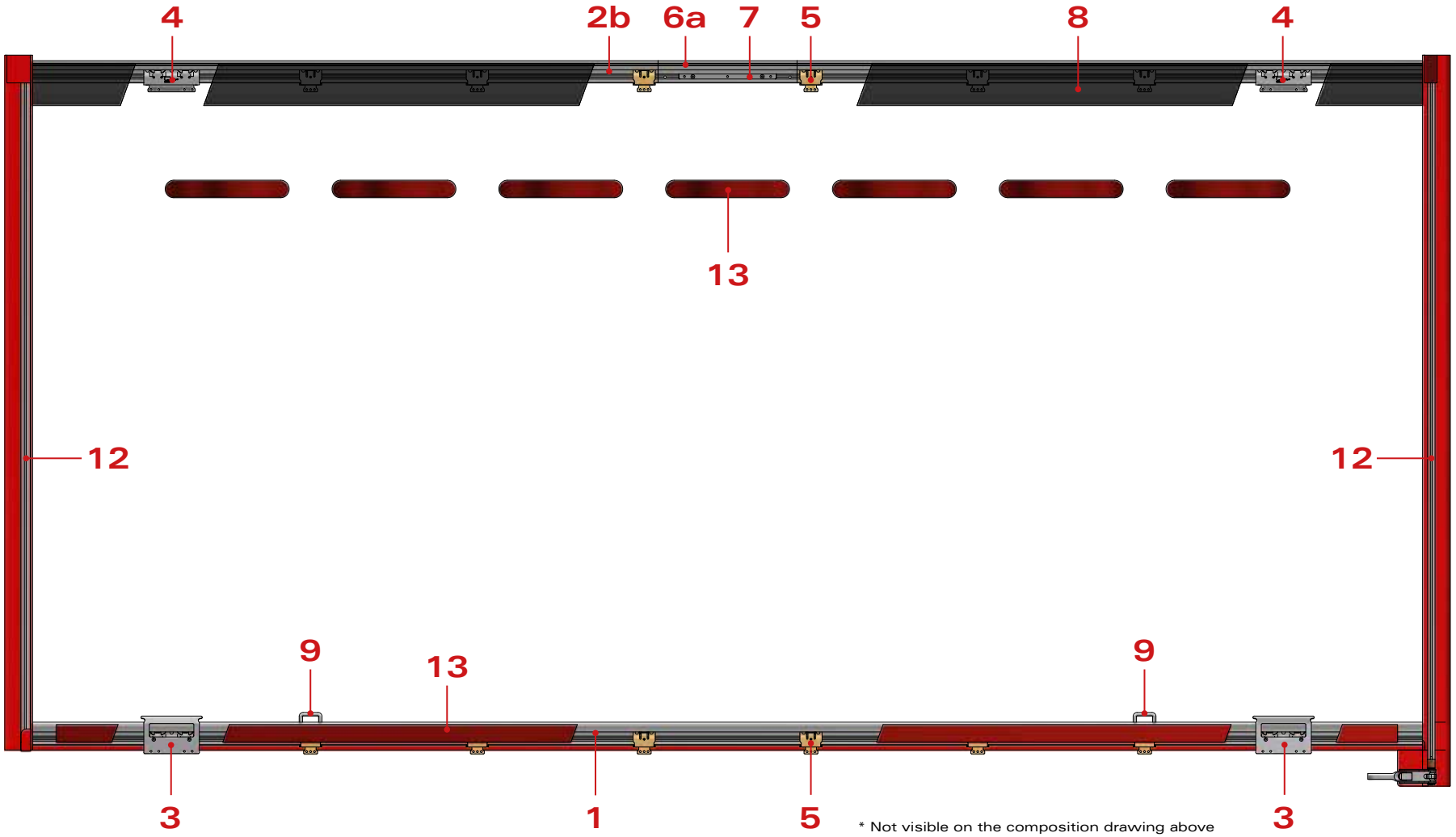

* Not visible on the composition drawing above

1	Penta City rail type B (Al)	6b*	Rail insert Solo Penta
2a*	Duo Penta rail (Al)	7	Set steel insert
2b	Penta City rail (Al)	8	PVC pelmet
2c*	Solo Penta rail (Al)	9	Set door stopper
3	P200 roller (bottom)	10*	Set fixation curtain
4	P200 roller (top)	11*	Set mounting plates
5	Penta City roller	12	Tension tube & ratchet
6a	Rail insert Penta City	13	PP band

3 P200 roller (bottom)

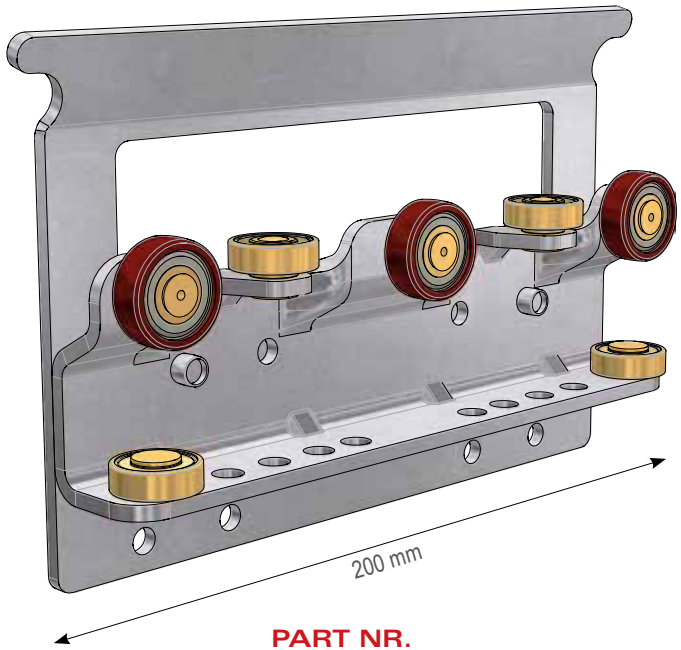

PART NR.

614-05004

4 P200 roller (top)

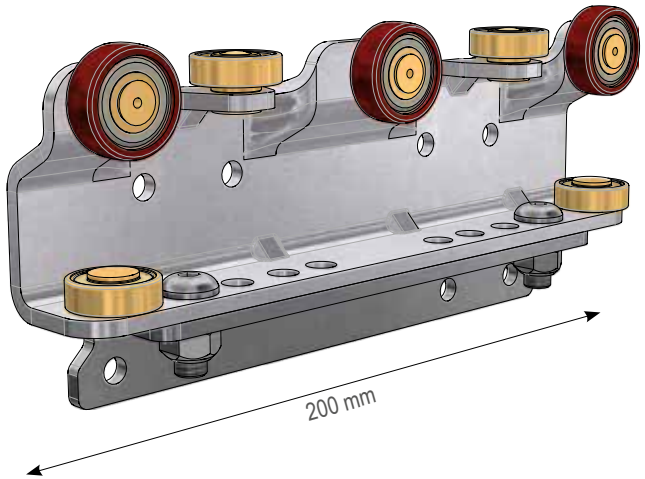

PART NR.

614-05005

5 Penta City roller

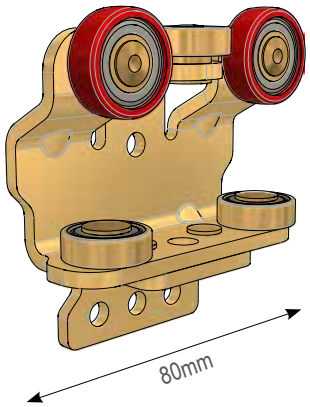

PART NR.

284-50020

1 Penta City rail (Al) Type B

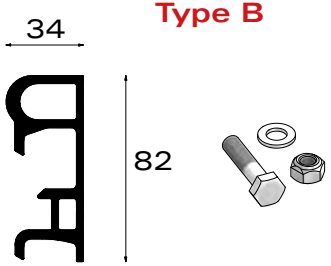

	PART NR.
Rail L = 7m	162-40700
Set (1set/m)	144-10129

2a Duo Penta rail (Al)

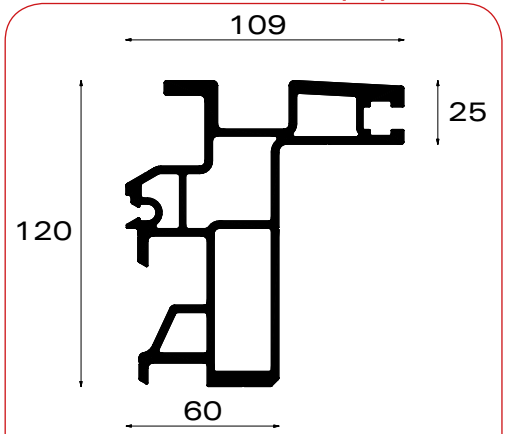

	PART NR.
L = 5m	162-30500
L = 7,8m	162-30780
L = 8,5m	162-30850
* L = 10,5m	162-30105
* L = 13,6m	162-30136

*Profile with pre-bending & milling

2b Penta City rail (Al)

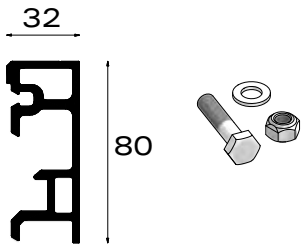

	PART NR.
Rail L = 7m	162-29700
Set (1set/m)	144-10129

*Use this rail with a steel frame

2c Solo Penta rail (Al)

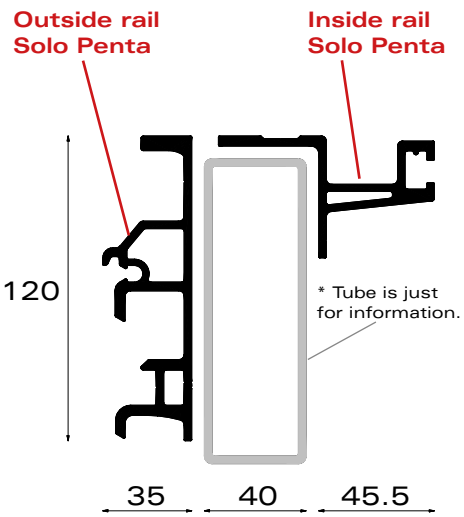

	PART NR.
Rail (out) L = 7,8m	162-41780
Rail (out) L = 8,5m	162-41850
Rail (in) L = 7,8m	162-43780
Rail (in) L = 8,5m	162-43850

8 PVC pelmet (black)

	PART NR.
L = 9m	242-02109
L = 14m	242-02114

6a Rail insert Penta City

	PART NR.
L = 0,5m	162-29005

9 Set door stopper

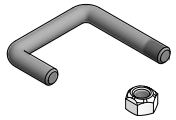

PART NR.
144-10143

13 PP Band (red)

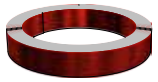

* The red PP band is mounted on the underside of the curtain.

* The small red PP band is mounted on the top of the curtain.

	PART NR.
L = 9m	242-06209
L = 14m	242-06214
L = 0,45m	242-06201

10 Set fix. curtain

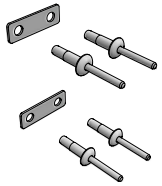

	PART NR.
Set	144-10144

1 set / 2 Penta City rollers

11 Set mounting plates

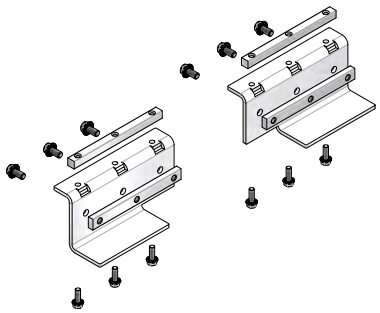

	PART NR.
Set	154-03101

* Only for Al rail Duo Penta

7 Set steel insert

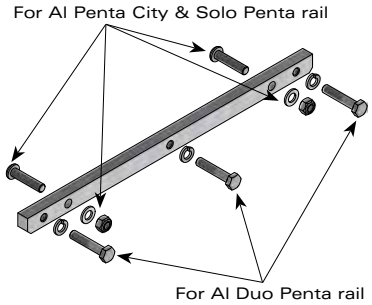

	PART NR.
Set	144-10119

6b Rail insert Solo Penta

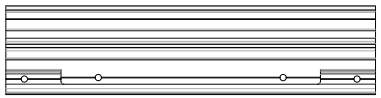

	PART NR.
L = 0,5m	162-41005

ARTISAN DISTRIBUTEUR
ADAM-BOISSONS.FR
Depuis 1923
ADAM-BOISSONS.FR
Carola
1664
Heineken
Leffe

JUS
SODAS
SIROPS
EAUX
BIÈRES
VINS
SPIRITUEUX
VENEZ DECOUVRIR !
VINS & SPIRITUEUX
+ DE 300 BIÈRES !
03 88 08 88 18
www.hobiere.com
67140 BARR
DHOLLANDIA

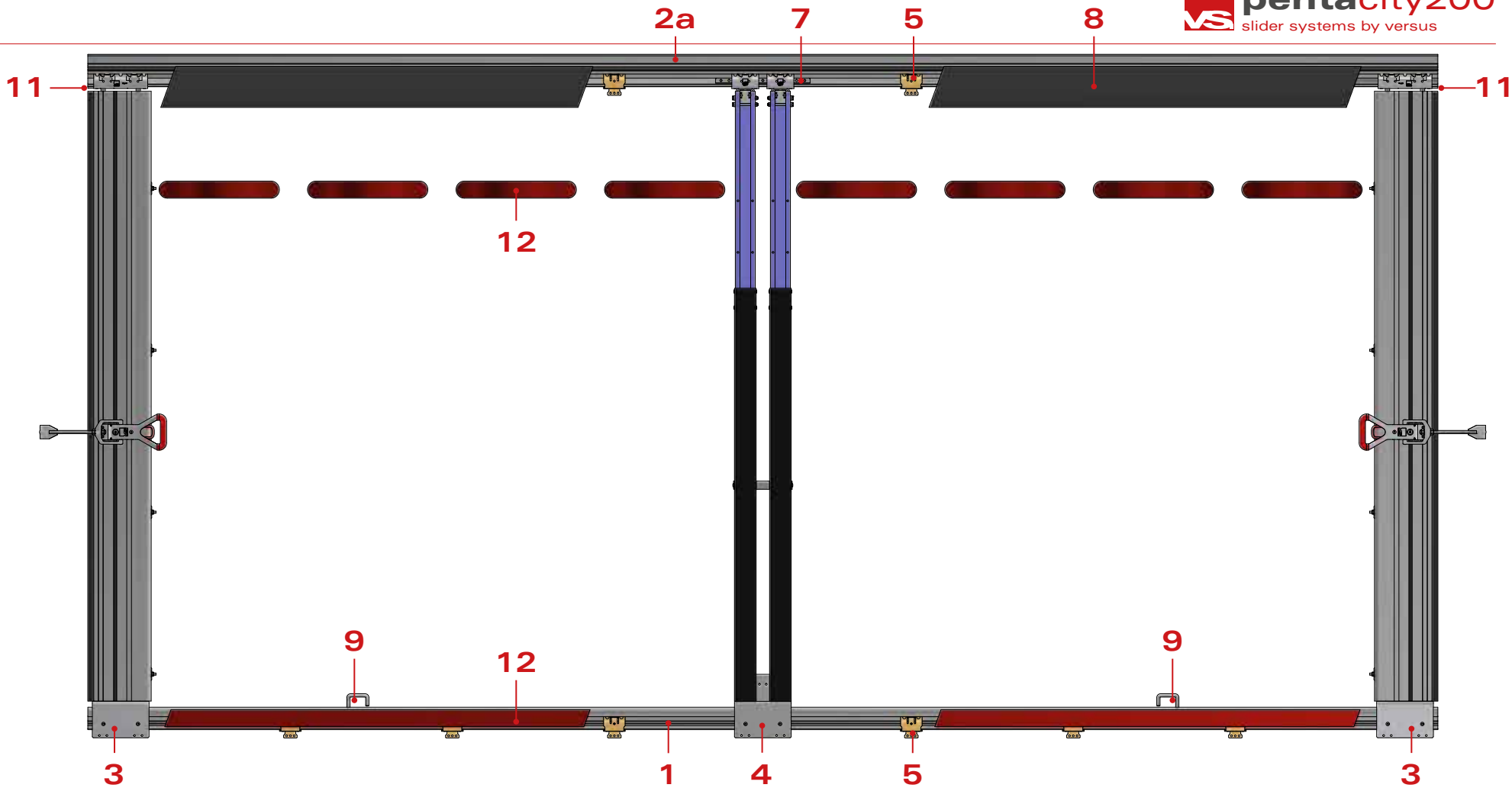

1	Penta City rail type B (Al)
2a	Duo Penta rail (Al)
2b*	Penta City rail (Al)
2c*	Solo Penta rail (Al)
3	Aluminium door
4	Pillar
5	Penta City roller

6a*	Rail insert Penta City
6b*	Rail insert Solo Penta
7	Set steel insert
8	PVC pelmet
9	Set door stopper
10*	Set fixation curtain
11	Set mounting plates
12	PP band

* Not visible on the composition drawing above

5 Penta City roller

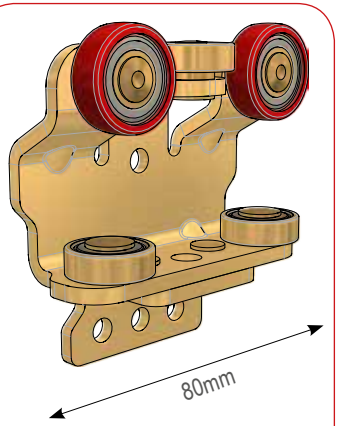

PART NR.

284-50020

3 Aluminium door

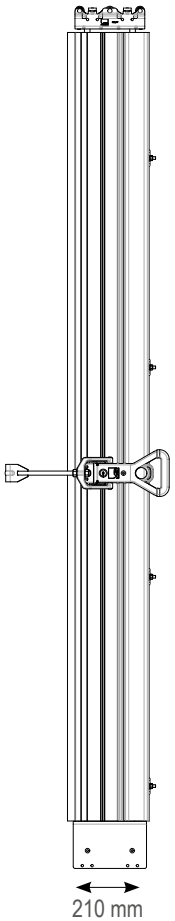

	PART NR.
Left	614-03003
Right	614-03004

4 Pillar

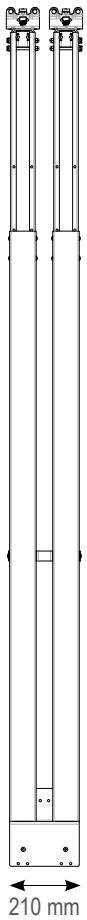

	PART NR.
XS	614-02002
S	614-02003
M	614-02004

Extra Small (XS) = aperture height between 1920 and 2170mm
Small (S) = aperture height between 2171 and 2420mm
Medium (M) = aperture heigth between 2421 and 2700mm

1 Penta City rail (Al) Type B

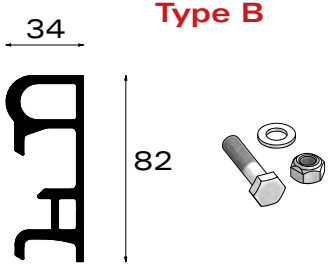

	PART NR.
Rail L = 7m	162-40700
Set (1set/m)	144-10129

2a Duo Penta rail (Al)

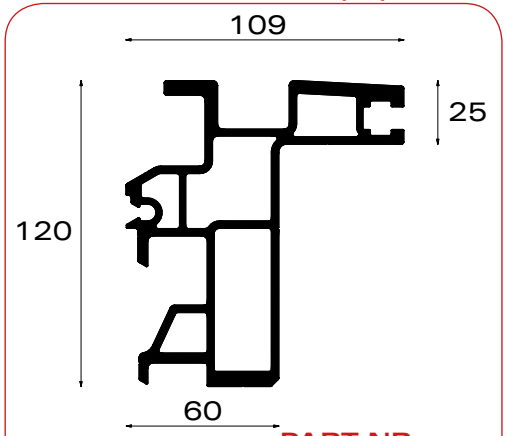

	PART NR.
L = 5m	162-30500
L = 7,8m	162-30780
L = 8,5m	162-30850
* L = 10,5m	162-30105
* L = 13,6m	162-30136

*profile with pre-bending & milling

2b Penta City rail (Al)

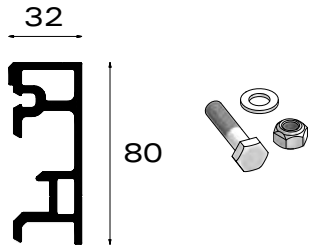

	PART NR.
Rail L = 7m	162-29700
Set (1set/m)	144-10129

* Use this rail with a steel frame

2c Solo Penta rail (Al)

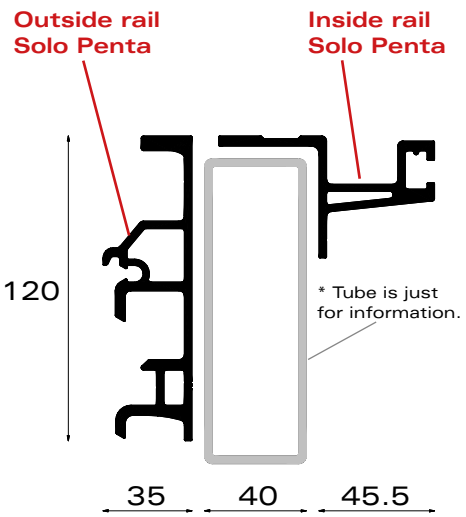

	PART NR.
Rail (out) L = 7,8m	162-41780
Rail (out) L = 8,5m	162-41850
Rail (in) L = 7,8m	162-43780
Rail (in) L = 8,5m	162-43850

8 PVC pelmet (black)

	PART NR.
L = 9m	242-02109
L = 14m	242-02114

6a Rail insert Penta City

	PART NR.
L = 0,5m	162-29005

9 Set door stopper

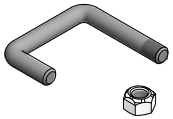

PART NR.
144-10143

Velcro strap

	PART NR.
L = 300mm	312-08001

12 PP Band (red)

* The red PP band is mounted on the underside of the curtain.

* The small red PP band is mounted on the top of the curtain.

	PART NR.
L = 9m	242-06209
L = 14m	242-06214
L = 0,45m	242-06201

10 Set fix. curtain

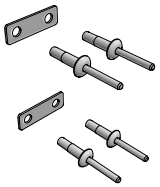

	PART NR.
Set	144-10144

1x Set A / Al door
1x Set A / 2 Penta City rollers
2x Set A / pillar

11 Set mounting plates

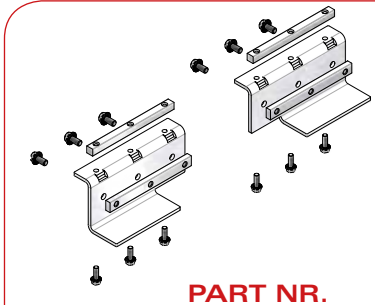

	PART NR.
Set	154-03101

* Only for Al Duo Penta rail

7 Set steel insert

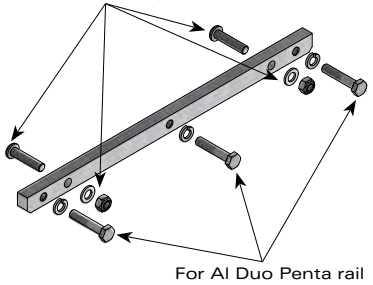

	PART NR.
Set	144-10119

6b Rail insert Solo Penta

	PART NR.
L = 0,5m	162-41005

Coca-Cola
90

หาดทิพย์

หาดทิพย์

หาดทิพย์

pentacity300

slider systems by versus

หาดทิพย์
ดื่มด่ำทุกความรู้สึก
Coca-Cola
FRR
190

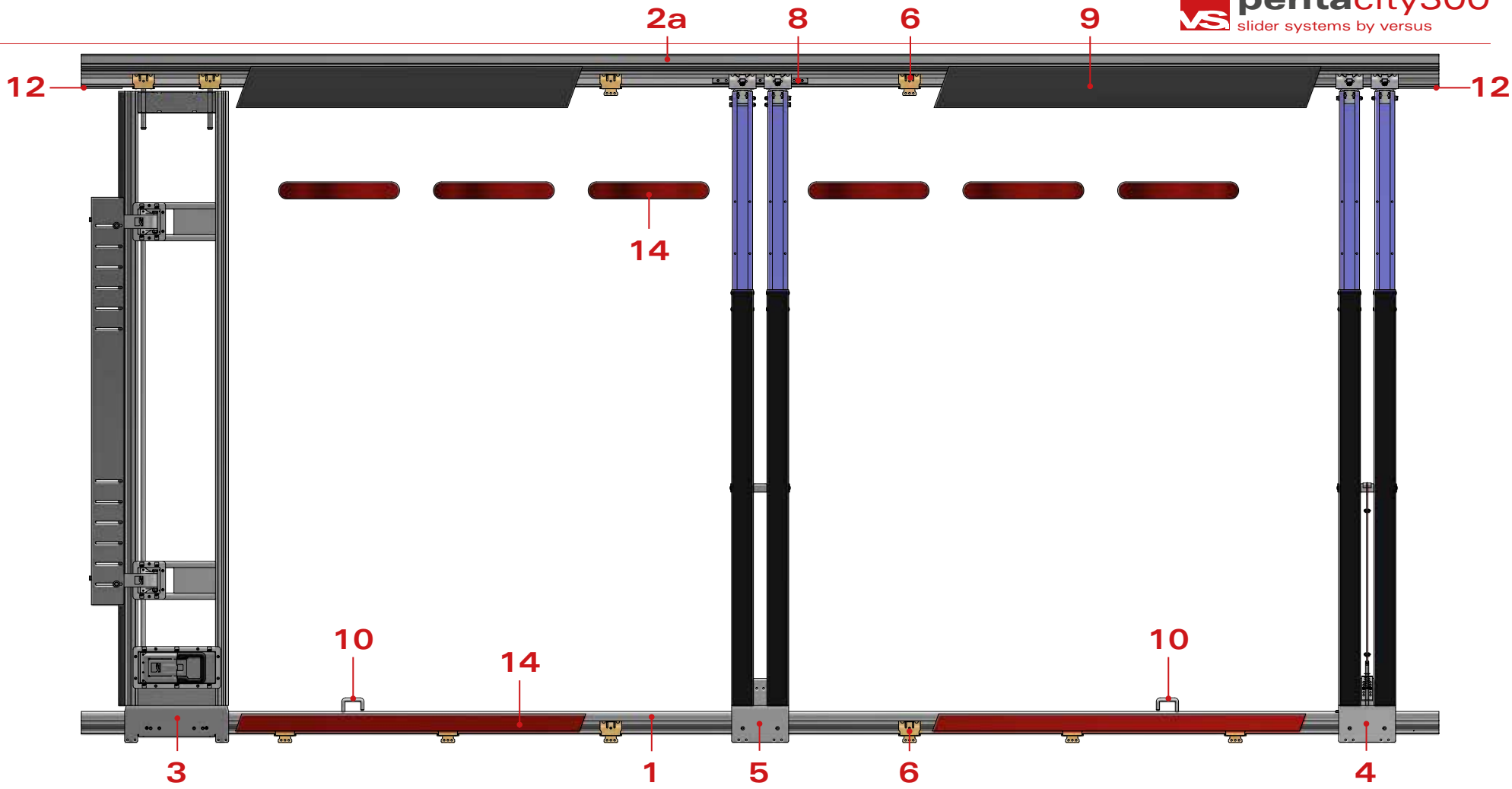

1	Penta City rail type B (Al)
2a	Duo Penta rail (Al)
2b*	Penta City rail (Al)
2c*	Solo Penta rail (Al)
3	Quick lock door
4	Basic door
5	Pillar
6	Penta City roller

* Not visible on the composition drawing above

7a*	Rail insert Penta City
7b*	Rail insert Solo Penta
8	Set steel insert
9	PVC pelmet
10	Set door stopper
11*	Set fixation curtain
12	Set mounting plates
13*	Locking nose
14	PP band

3 Quick lock door

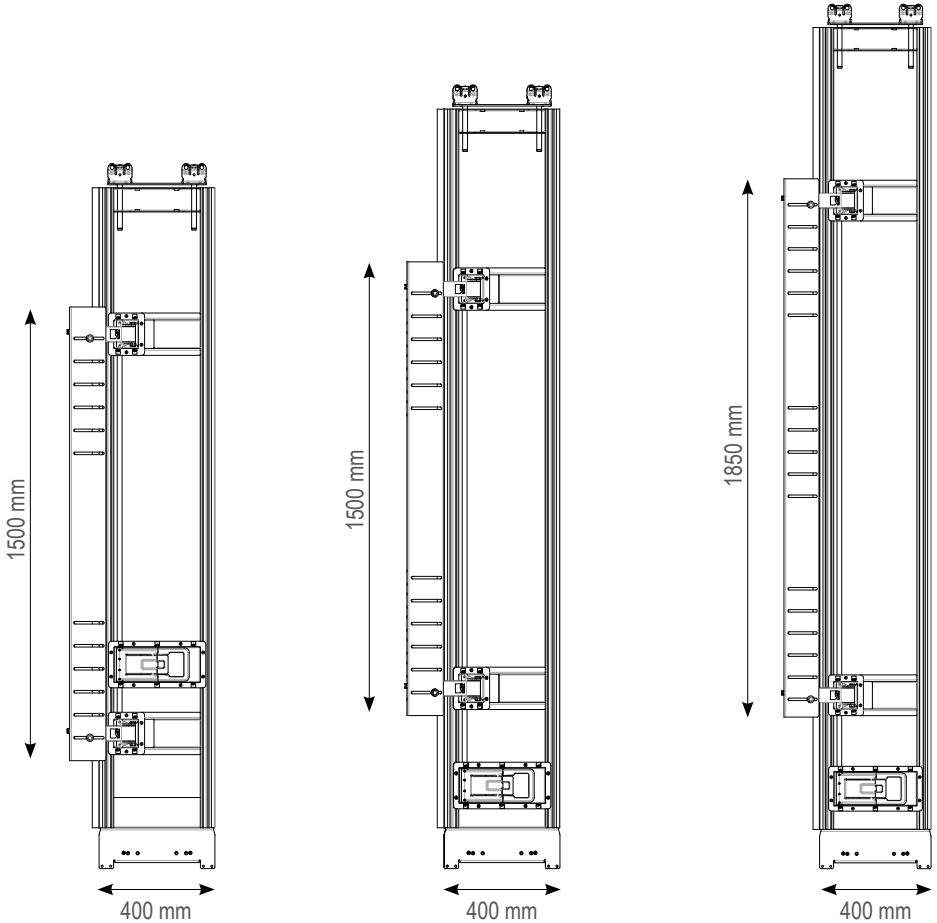

	PART NR.	PART NR.	PART NR.
Left SA	614-01112	614-01100	614-01101
Right SA	614-01113	614-01103	614-01104
Left LA	614-01114	614-01106	614-01107
Right LA	614-01115	614-01109	614-01110
	Extra Small 1920-2170mm	Small 2171-2420mm	Medium 2421-2800mm

Small arm (SA) = short hinge arm covering distance of 40 to 103mm
Large arm (LA) = long hinge arm covering distance of 103 to 190mm

6 Penta City roller

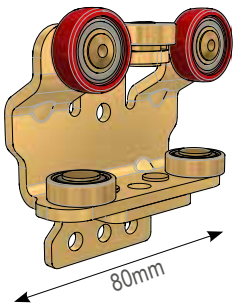

PART NR.

284-50020

10 Set door stopper

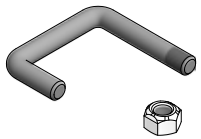

PART NR.

144-10143

13 Locking nose

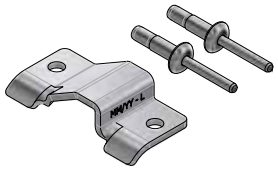

* The figure is left rear in driving direction.

	PART NR.
Left	144-10161
Right	144-10162

4 Basic door

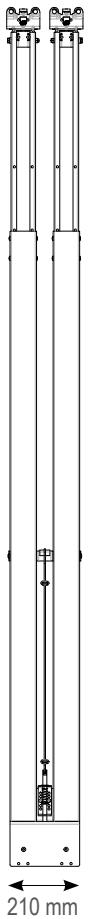

	PART NR.
XS	614-03005
S	614-03006
M	614-03007

5 Pillar

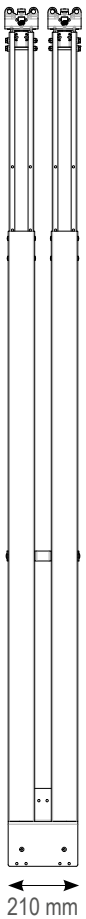

	PART NR.
XS	614-02002
S	614-02003
M	614-02004

Extra Small (XS) = aperture height between 1920 and 2170mm
Small (S) = aperture height between 2171 and 2420mm
Medium (M) = aperture heigth between 2421 and 2700mm

1 Penta City rail (Al) Type B

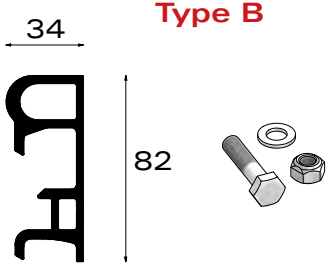

	PART NR.
Rail L = 7m	162-40700
Set (1set/m)	144-10129

2a Duo Penta rail (Al)

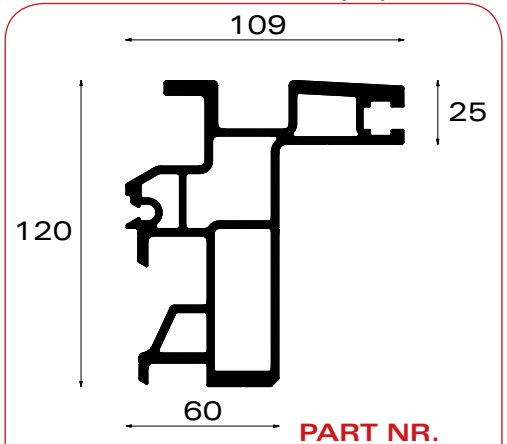

	PART NR.
L = 5m	162-30500
L = 7,8m	162-30780
L = 8,5m	162-30850
* L = 10,5m	162-30105
* L = 13,6m	162-30136

*profile with pre-bending & milling

2b Penta City rail (Al)

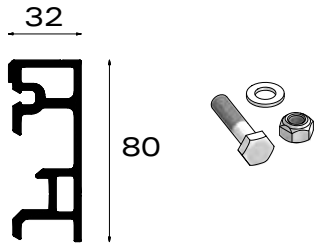

	PART NR.
Rail L = 7m	162-29700
Set (1set/m)	144-10129

*Use this rail with a steel frame

2c Solo Penta rail (Al)

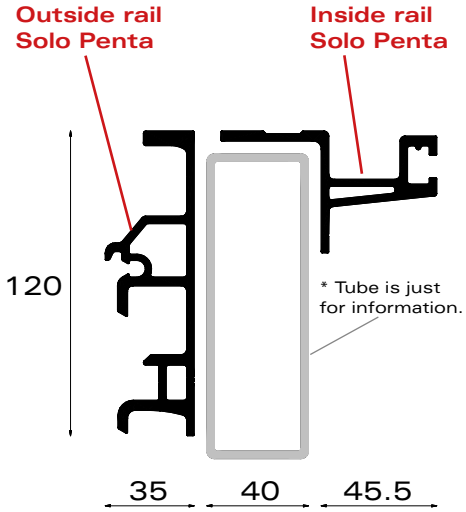

	PART NR.
Rail (out) L = 7,8m	162-41780
Rail (out) L = 8,5m	162-41850
Rail (in) L = 7,8m	162-43780
Rail (in) L = 8,5m	162-43850

9 PVC pelmet (black)

	PART NR.
L = 9m	242-02109
L = 14m	242-02114

7a Rail insert penta city

	PART NR.
L = 0,5m	162-29005

14 PP Band (red)

* The red PP band is mounted on the underside of the curtain.

* The small red PP band is mounted on the top of the curtain.

	PART NR.
L = 9m	242-06209
L = 14m	242-06214
L = 0,45m	242-06201

11 Set fix. curtain

Set A

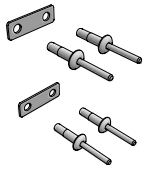

Set B

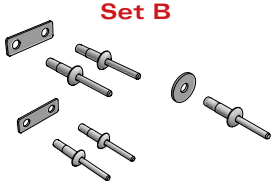

	PART NR.
Set A	144-10144
Set B	144-10140

1x Set A / Al door
1x Set A / 2 penta city rollers
1x Set A / basic door
2x Set A / pillar
1x Set B / QL-door

Velcro strap

	PART NR.
L = 300mm	312-08001

12 Set mounting plates

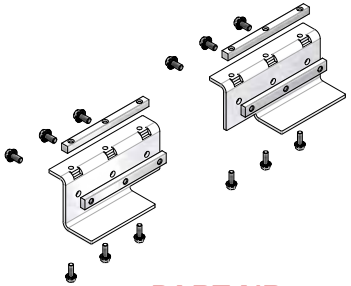

	PART NR.
Set	154-03101

*Only for Al Duo Penta rail

8 Set steel insert

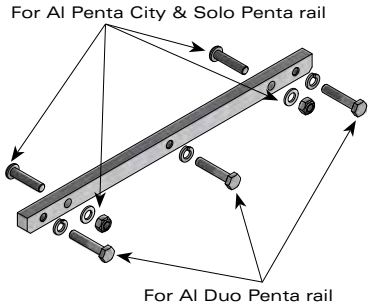

	PART NR.
Set	144-10119

7b Rail insert Solo Penta

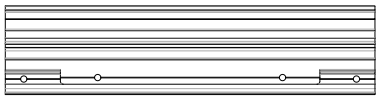

	PART NR.
L = 0,5m	162-41005

Jamnica

Jamnica

Jamnica

Jamnica

Jamnica

pentaflex
slider systems by versus
quick and safe through town

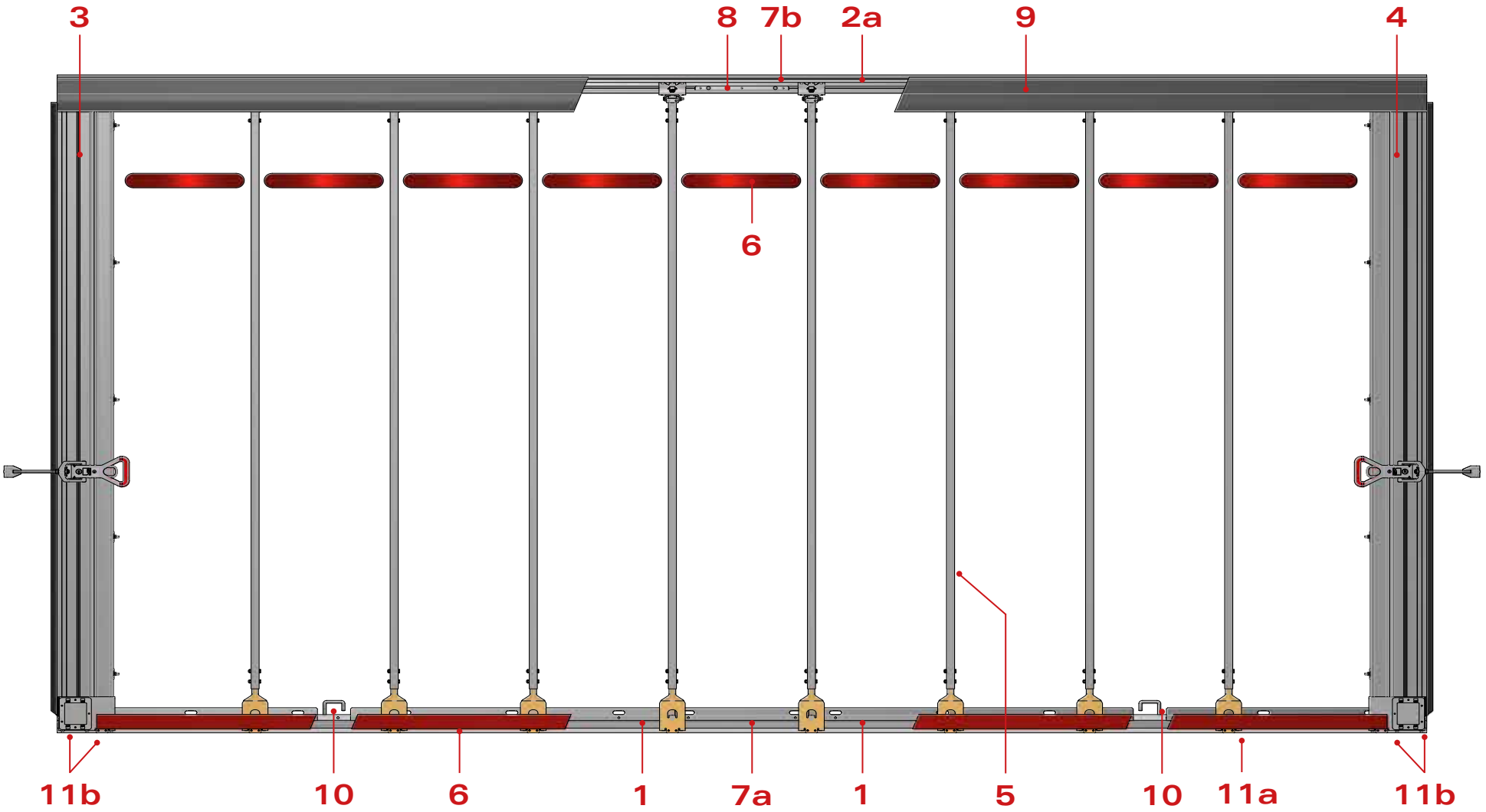

1	Penta Flex rail (steel)	7a	Rail insert Penta Flex
2a	Penta City rail (Al)	7b	Rail insert Penta City
2b*	Solo Penta rail (Al)	7c*	Rail insert Solo Penta
3	Aluminium door (left)	8	Set steel insert
4	Aluminium door (right)	9	PVC Pelmet
5	Mini pillar	10	Set door stopper
6	PP band (red)	11	Set fixation curtain

3 Aluminium door left

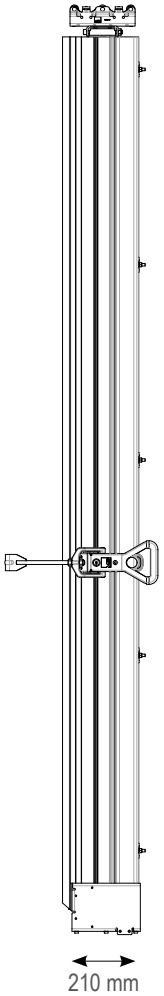

	PART NR.
Left Al	644-01001

4 Aluminium door right

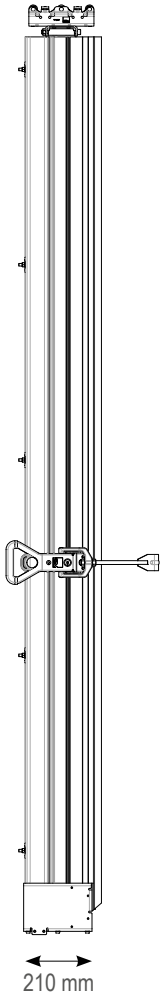

	PART NR.
Right Al	644-01002

5 Mini pillar

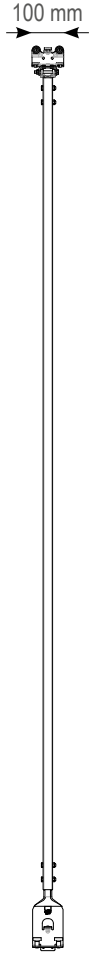

	PART NR.
Small	644-04001
Medium	644-04002
Large	644-04003

Small (S) = aperture height between 0 and 2330mm
Medium (M) = aperture heigth between 2331 and 2470mm
Large (L) = aperture heigth between 2471 and 2740mm

1 Penta Flex rail (steel)

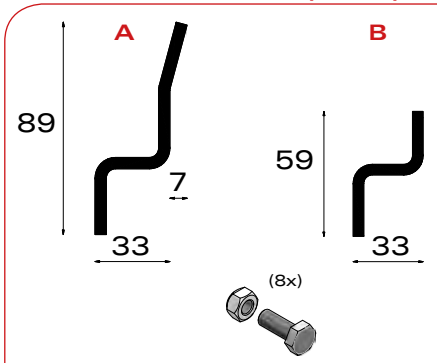

	PART NR.
Rail (A) L = 3m	162-39300
Rail (B) L = 3m	162-39301
Set (1set/rail)	144-10151

Velcro strap

	PART NR.
L = 150mm	312-08002

7a Rail insert Penta Flex

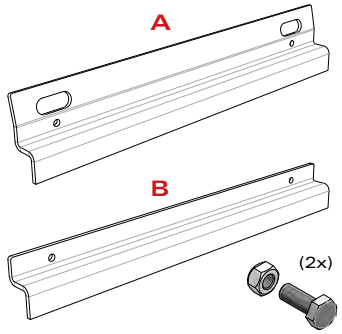

	PART NR.
Rail (A) L = 0,5m	144-10153
Rail (B) L = 0,5m	144-10154

2a Penta City rail (Al)

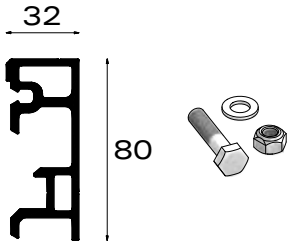

	PART NR.
Rail L = 7m	162-29700
Set (1set/m)	144-10129

* Use this rail with a steel frame

7b Rail insert Penta City

	PART NR.
L = 0,5m	162-29005

8 Set steel insert

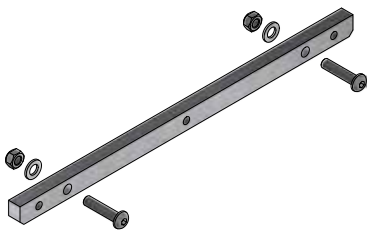

	PART NR.
Set	144-10119

* For Al Penta City & Solo Penta rails

2b Solo Penta rail (Al)

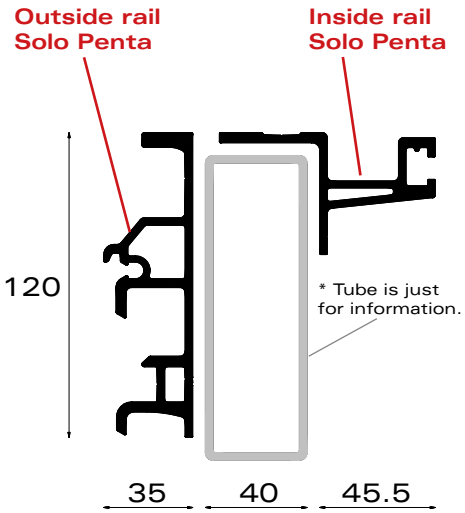

	PART NR.
Rail (out) L = 7,8m	162-41780
Rail (out) L = 8,5m	162-41850
Rail (in) L = 7,8m	162-43780
Rail (in) L = 8,5m	162-43850

7c Rail insert solo penta

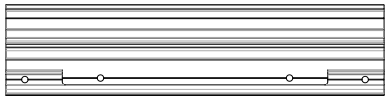

	PART NR.
L = 0,5m	162-41005

11 Set fixation curtain

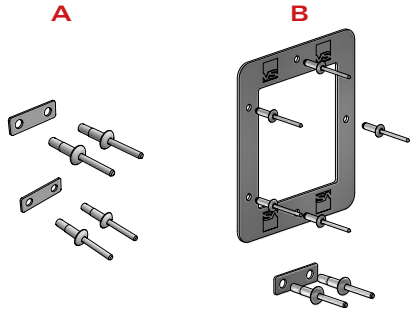

	PART NR.
Set mini pillar (A)	144-10144
Set Al door (B)	144-10152

9 PVC pelmet (black)

	PART NR.
L = 9m	242-02109
L = 14m	242-02114

6 PP Band (red)

* The red PP band is mounted on the underside of the curtain.

* The small red PP band is mounted on the top of the curtain.

	PART NR.
L = 9m	242-06209
L = 14m	242-06214
L = 0,45m	242-06201

10 Set door stopper

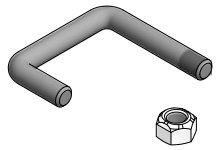

PART NR.
144-10143

wave®
slider systems by versus

kits

in box systems

Type of kit	Page
Kit 5000	217
Kit 7500	223
Kit 7500+	229
Kit Axces	235

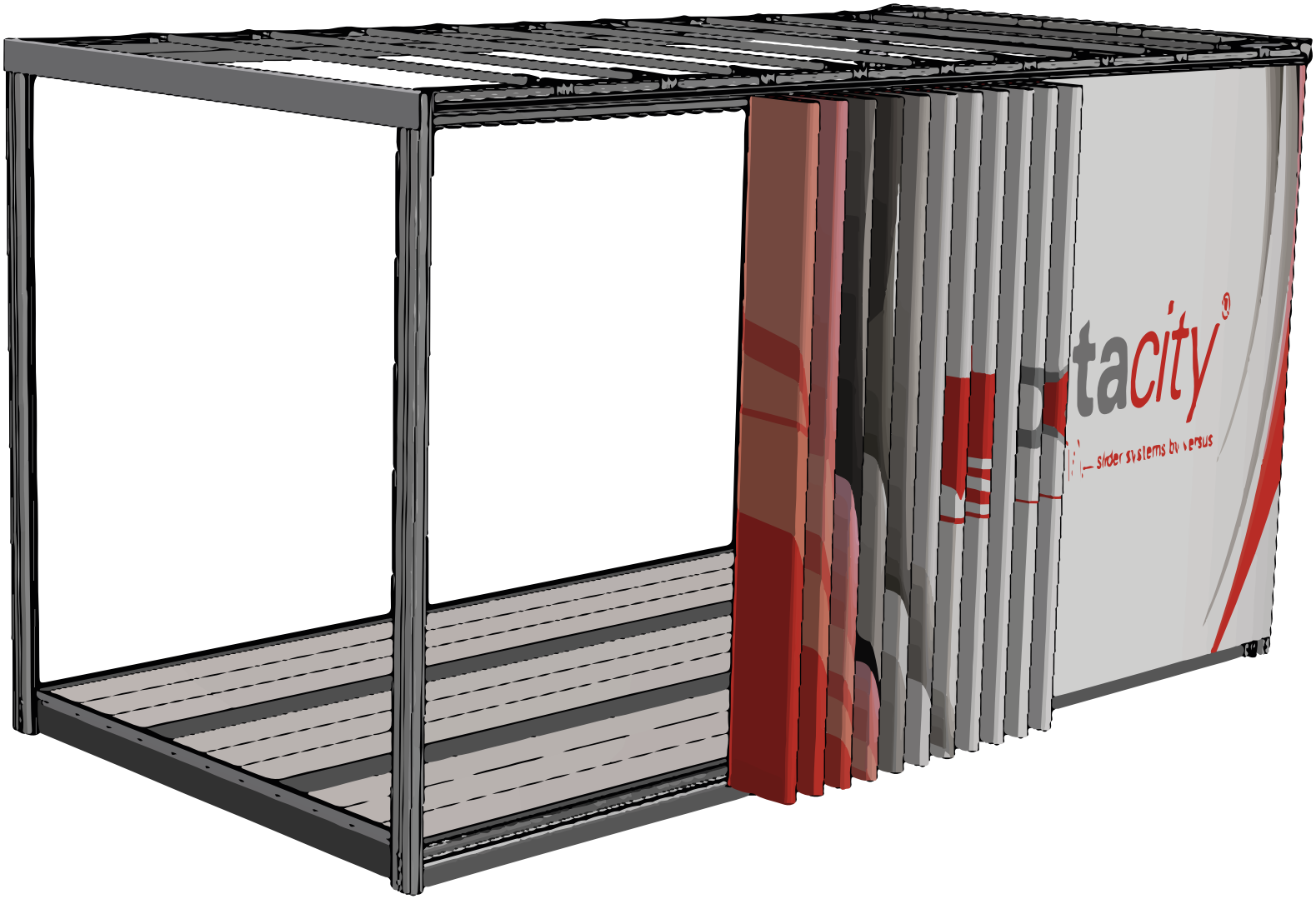
tacity
slider systems by versus

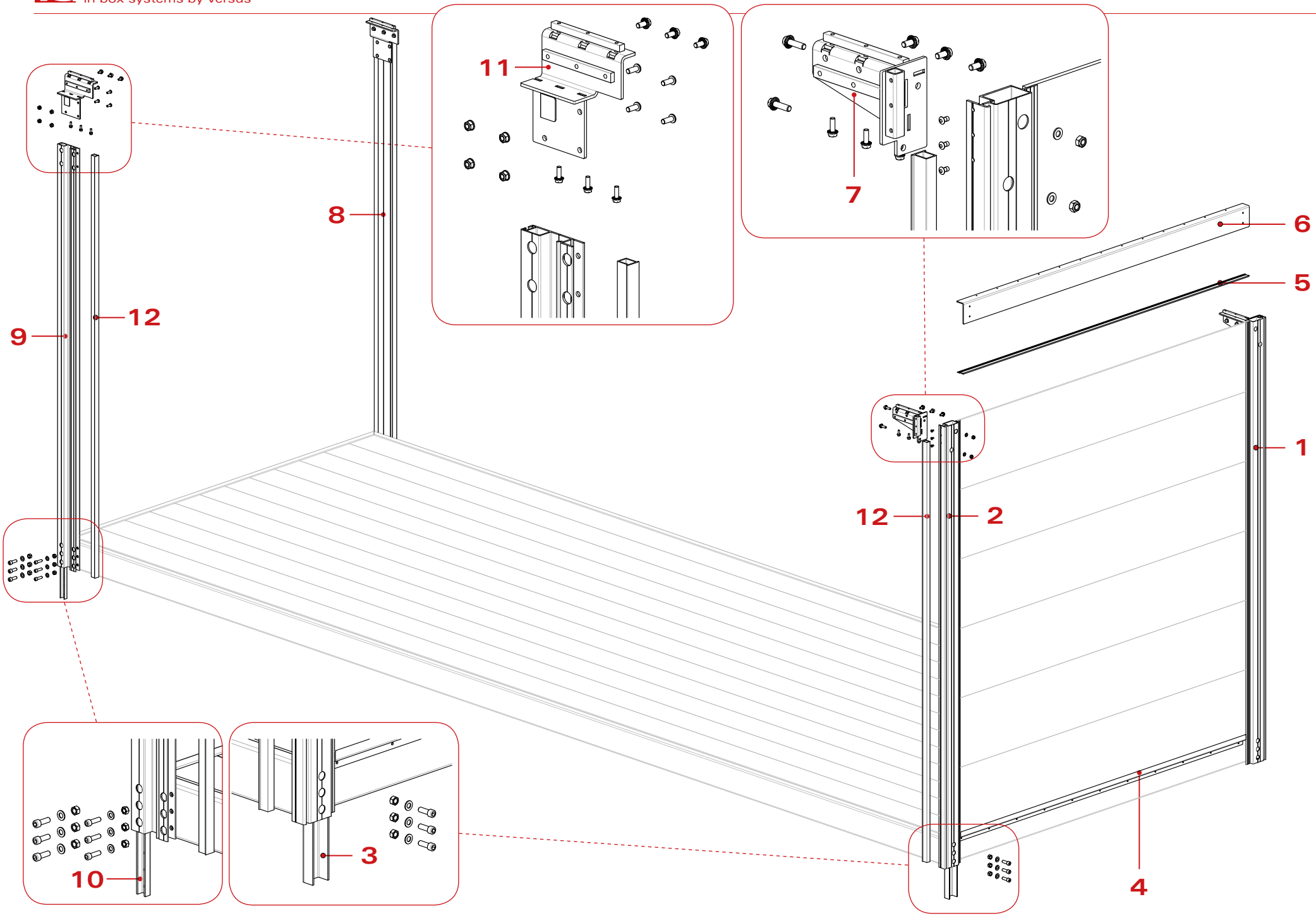
11
7
8
6
5
9
12
1
12
2
10
3
4

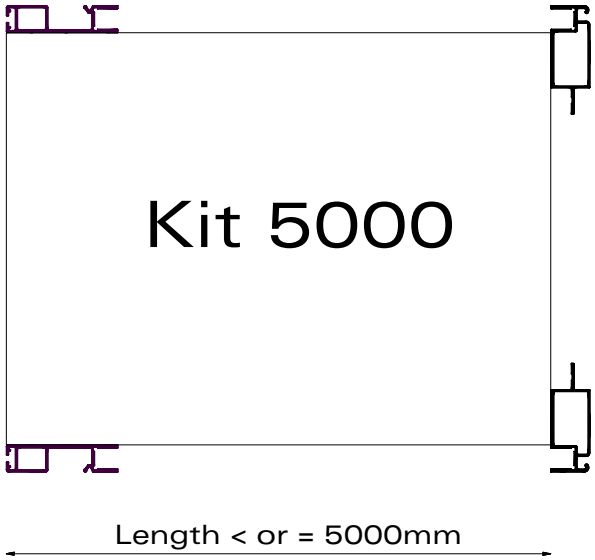

Nr.	Part Nr.	Qty	Description
1	452-01110	1	Front corner left / Al / L = 3000mm
2	452-01111	1	Front corner right / Al / L = 3000mm
3	154-03037	1	Set reinforcements front corners with bolts
4	452-04002	1	Bottom profile for wall mounting
5	451-04001	1	Sealing profile bulkhead
6	452-30260	1	Connecting profile bulkhead
7a	154-03030	1	Mounting set front Duo rail
7b	154-03031	1	Mounting set front Micro rail
8	402-02105	1	Rear corner left / Al / L = 3000mm
9	402-02106	1	Rear corner right / Al / L = 3000mm
10	154-03038	1	Set reinforcements rear corners with bolts
11a	154-03032	1	Mounting set rear Duo rail
11b	154-03033	1	Mounting set rear Micro rail
*12	452-01124	4	Aluminium insert for corner profiles

* Only needed with Penta sliders!

Mounting set rear Duo rail

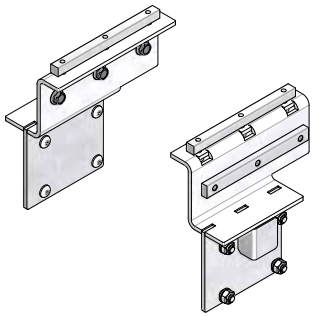

PART NR.

Set	154-03032

Mounting set front Duo rail

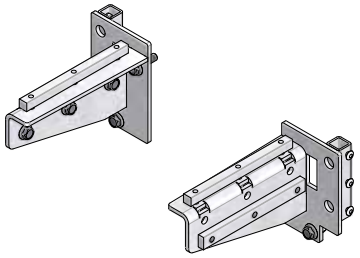

PART NR.

Set	154-03030

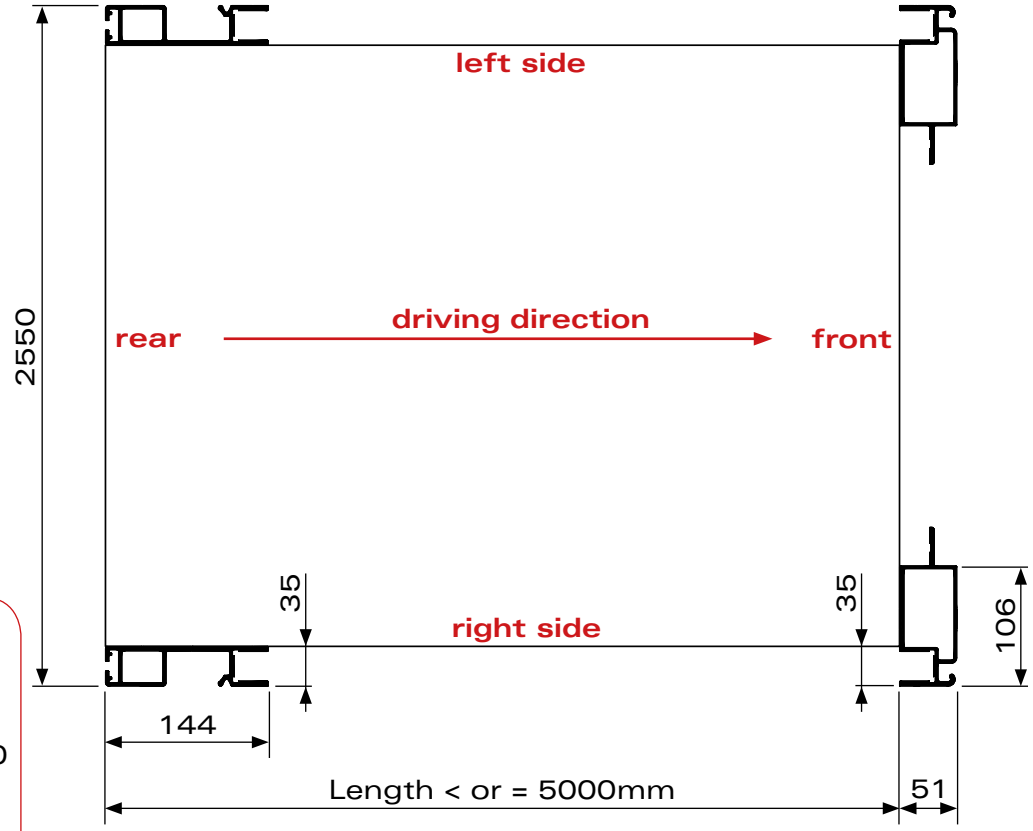

Rear corners L = 3m

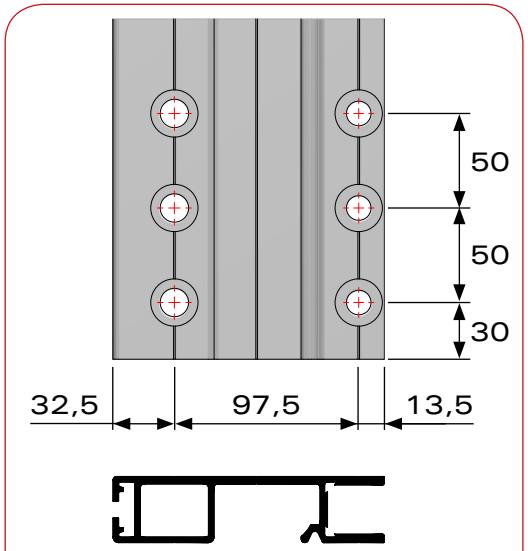

PART NR.

Left	402-02105
Right	402-02106

Front corners L = 3m

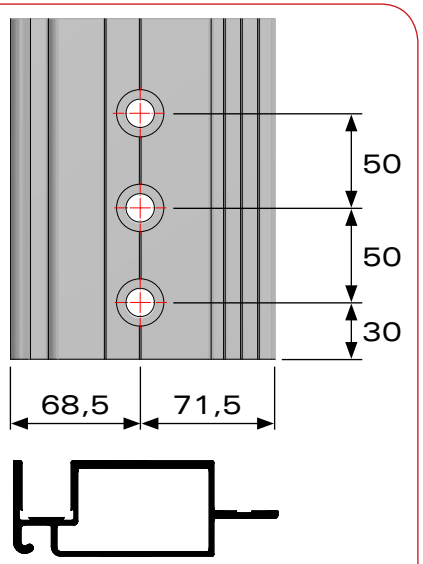

PART NR.

Left	452-01110
Right	452-01111

Mounting set rear Micro rail

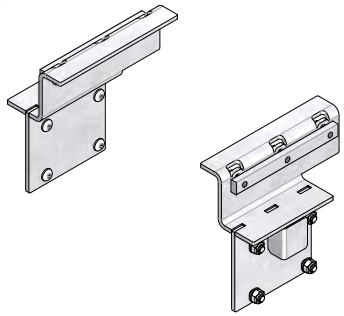

PART NR.

Set	154-03033

Connecting profile bulkhead

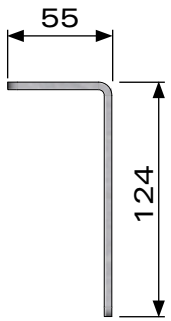

PART NR.

452-30260

Set reinforcements front corners

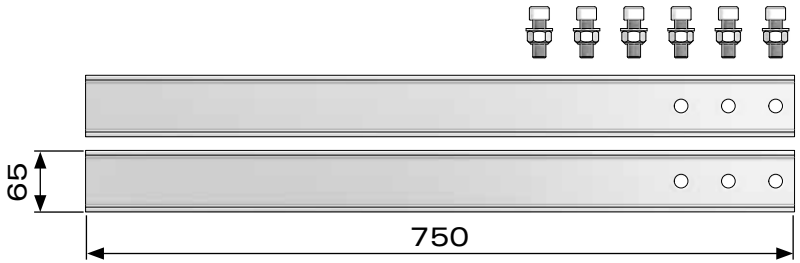

PART NR.

154-03037

Mounting set front Micro rail

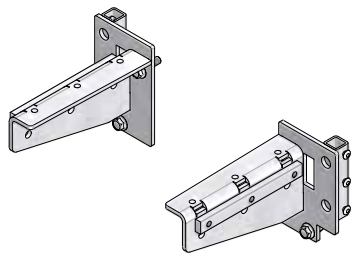

PART NR.

Set	154-03031

Al insert for corner profiles

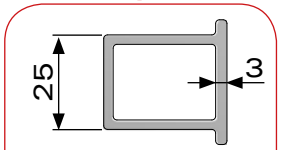

PART NR.

452-01124

* Only needed with Penta sliders!

Set reinforcements rear corners

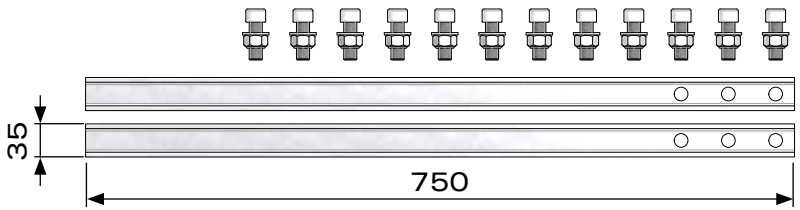

PART NR.

154-03038

Sealing profile bulkhead

PART NR.

451-04001

Bottom profile

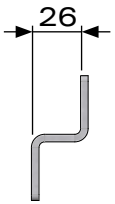

PART NR.

452-04002

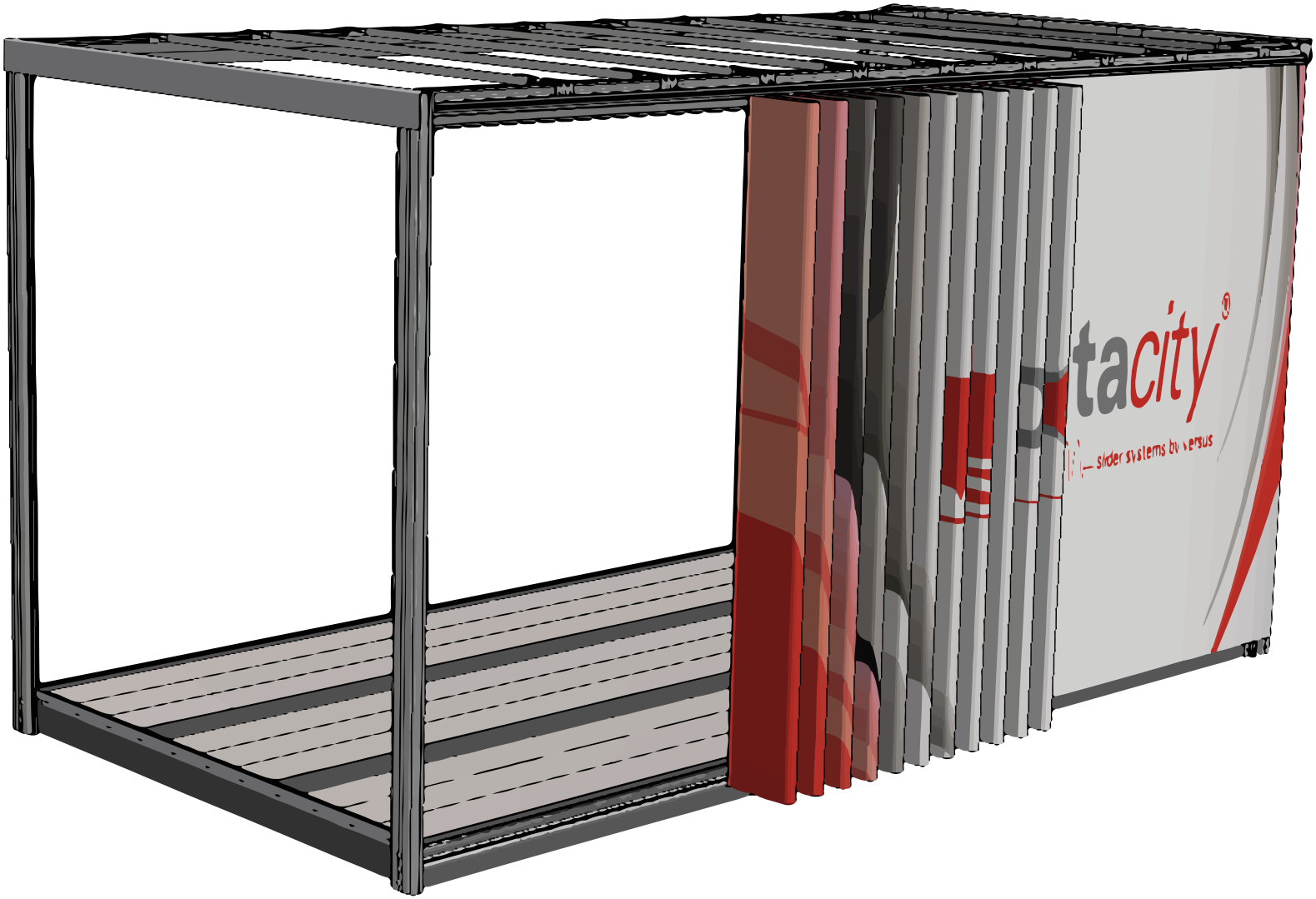
tacity
slider systems by versus

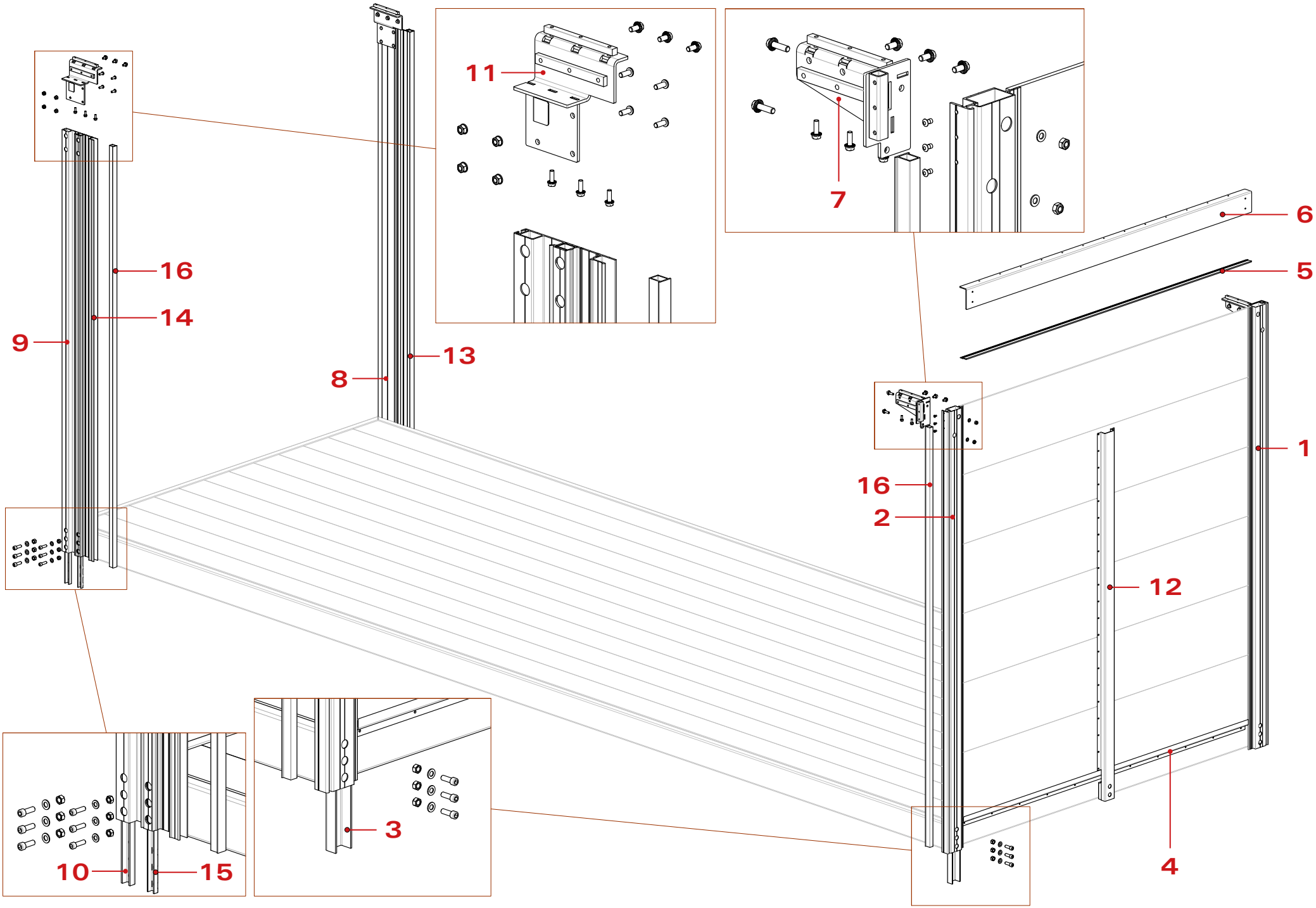
11
7
6
5
16
14
9
13
8
1
16
2
12
4
3
10
15

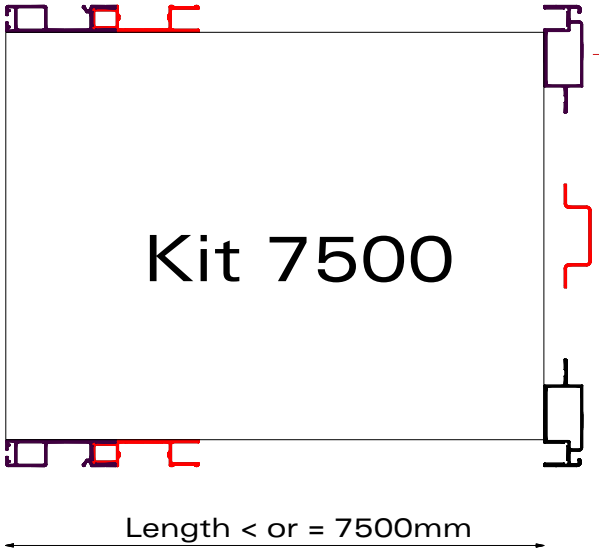

Nr.	Part Nr.	Qty	Description
1	452-01110	1	Front corner left / Al / L = 3000mm
2	452-01111	1	Front corner right / Al / L = 3000mm
3	154-03037	1	Set reinforcements front corners with bolts
4	452-04002	1	Bottom profile for wall mounting
5	451-04001	1	Sealing profile bulkhead
6	452-30260	1	Connecting profile bulkhead
7a	154-03030	1	Mounting set front Duo rail
7b	154-03031	1	Mounting set front Micro rail
8	402-02105	1	Rear corner left / Al / L = 3000mm
9	402-02106	1	Rear corner right / Al / L = 3000mm
10	154-03038	1	Set reinforcements rear corners with bolts
11a	154-03032	1	Mounting set rear Duo rail
11b	154-03033	1	Mounting set rear Micro rail
12	154-03036	1	Bulkhead support with bolts
13	452-01114	1	Side profile rear corner left
14	452-01115	1	Side profile rear corner right
15	152-02021	2	Reinforcement side profile
*16	452-01124	4	Aluminium insert for corner profiles

* Only needed with Penta sliders!

Mounting set rear Duo rail

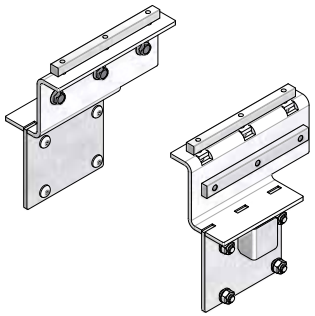

PART NR.

Set	154-03032

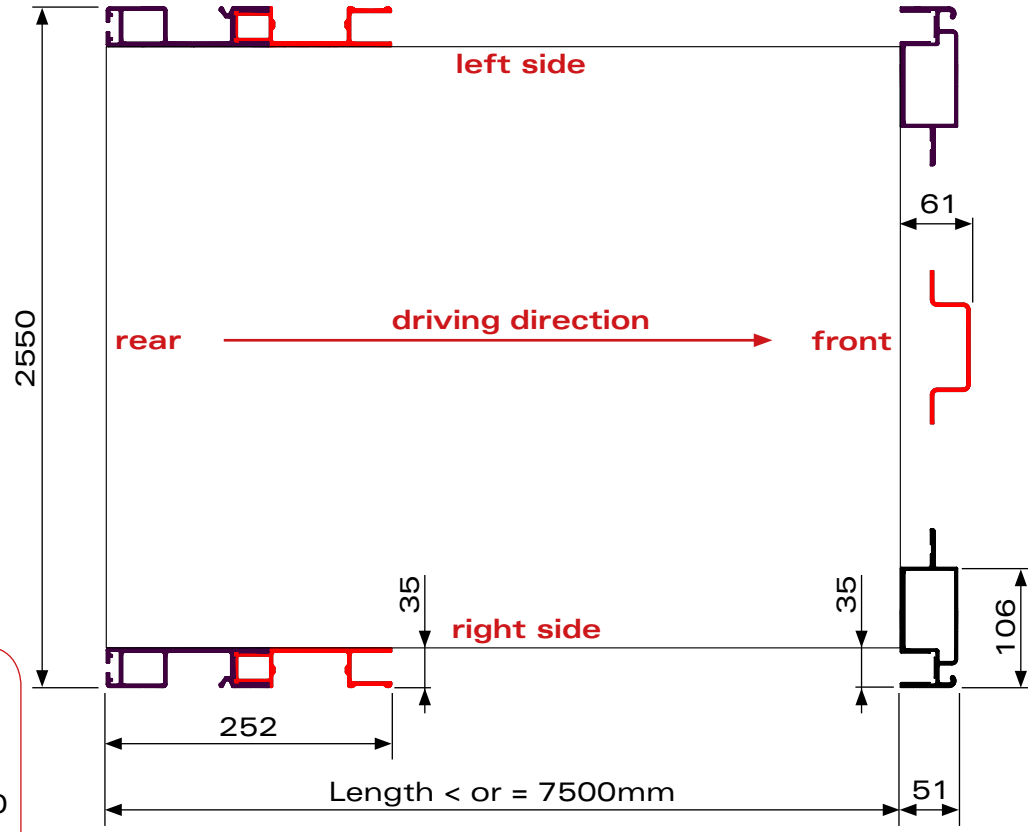

Mounting set front Duo rail

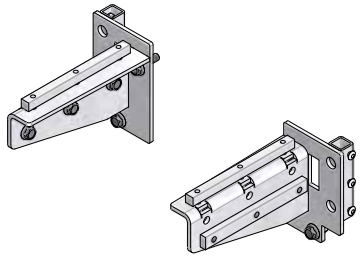

PART NR.

Set	154-03030

Rear corners L = 3m

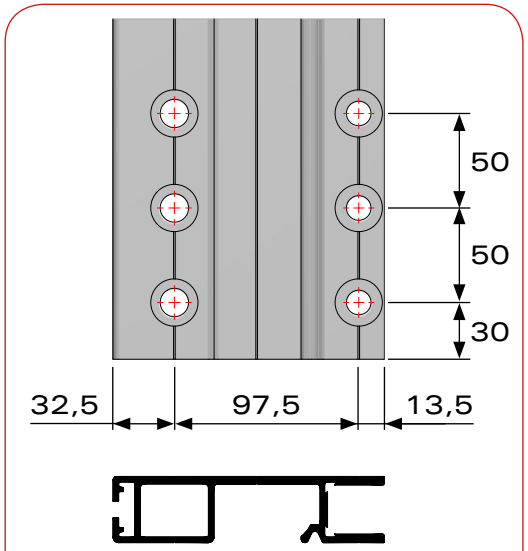

PART NR.

Left	402-02105
Right	402-02106

Set bulkhead support

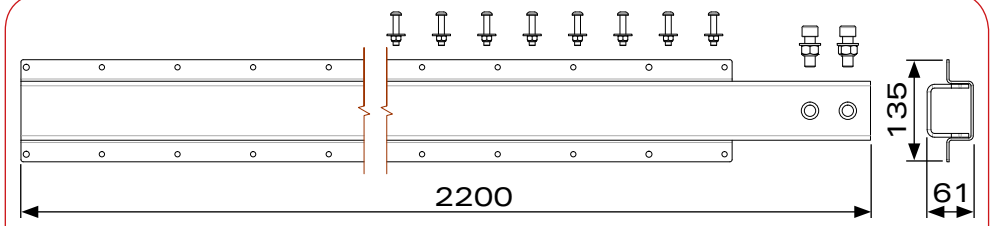

PART NR.

154-03036

Front corners L = 3m

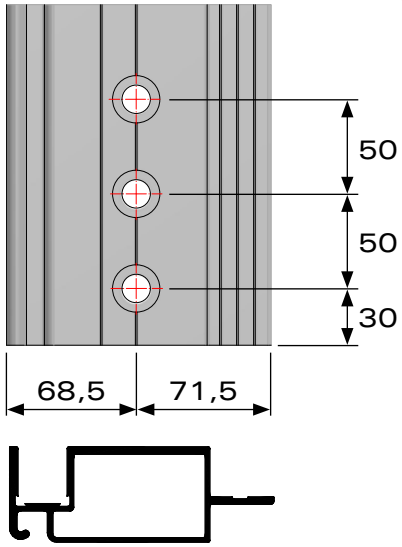

PART NR.

Left	452-01110
Right	452-01111

Mounting set rear Micro rail

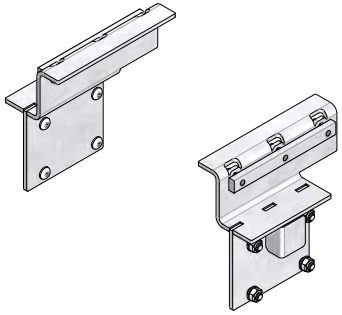

PART NR.

Set	154-03033

Mounting set front Micro rail

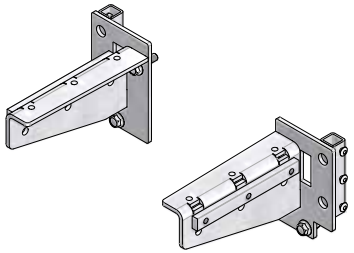

PART NR.

Set	154-03031

Al insert for corner profiles

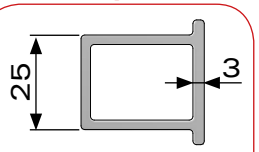

PART NR.

452-01124

* Only needed by Penta sliders!

Set reinforcements front corners

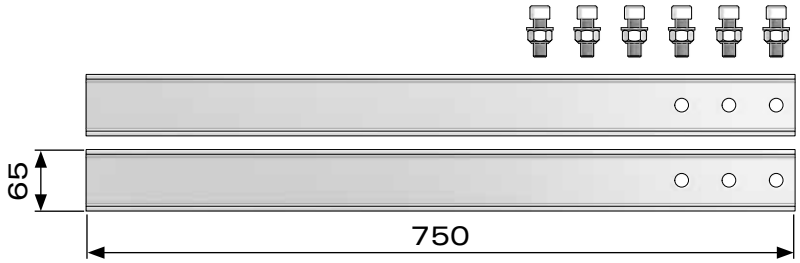

PART NR.

154-03037

Bottom profile

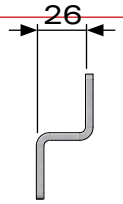

PART NR.

452-04002

Set reinforcements rear corners

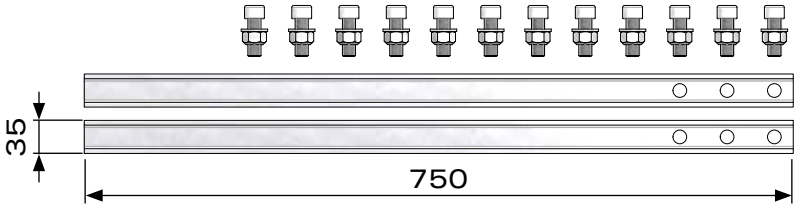

PART NR.

154-03038

Side profile L = 3m

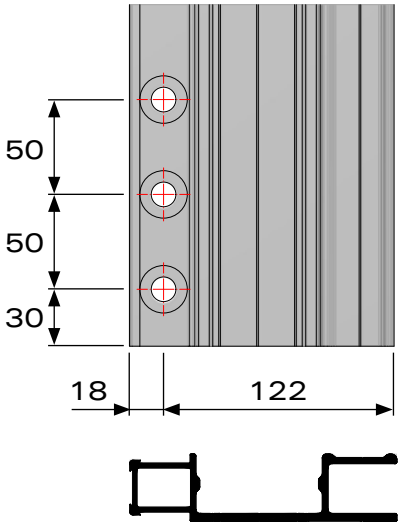

PART NR.

Left	452-01114
Right	452-01115

Connecting profile bulkhead

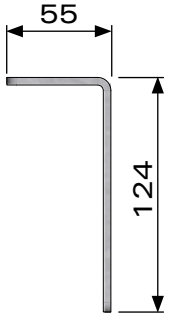

PART NR.

452-30260

Sealing profile bulkhead

PART NR.

451-04001

Set reinforcements side profile

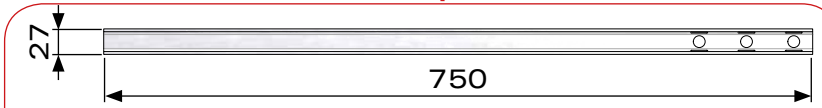

PART NR.

152-02021

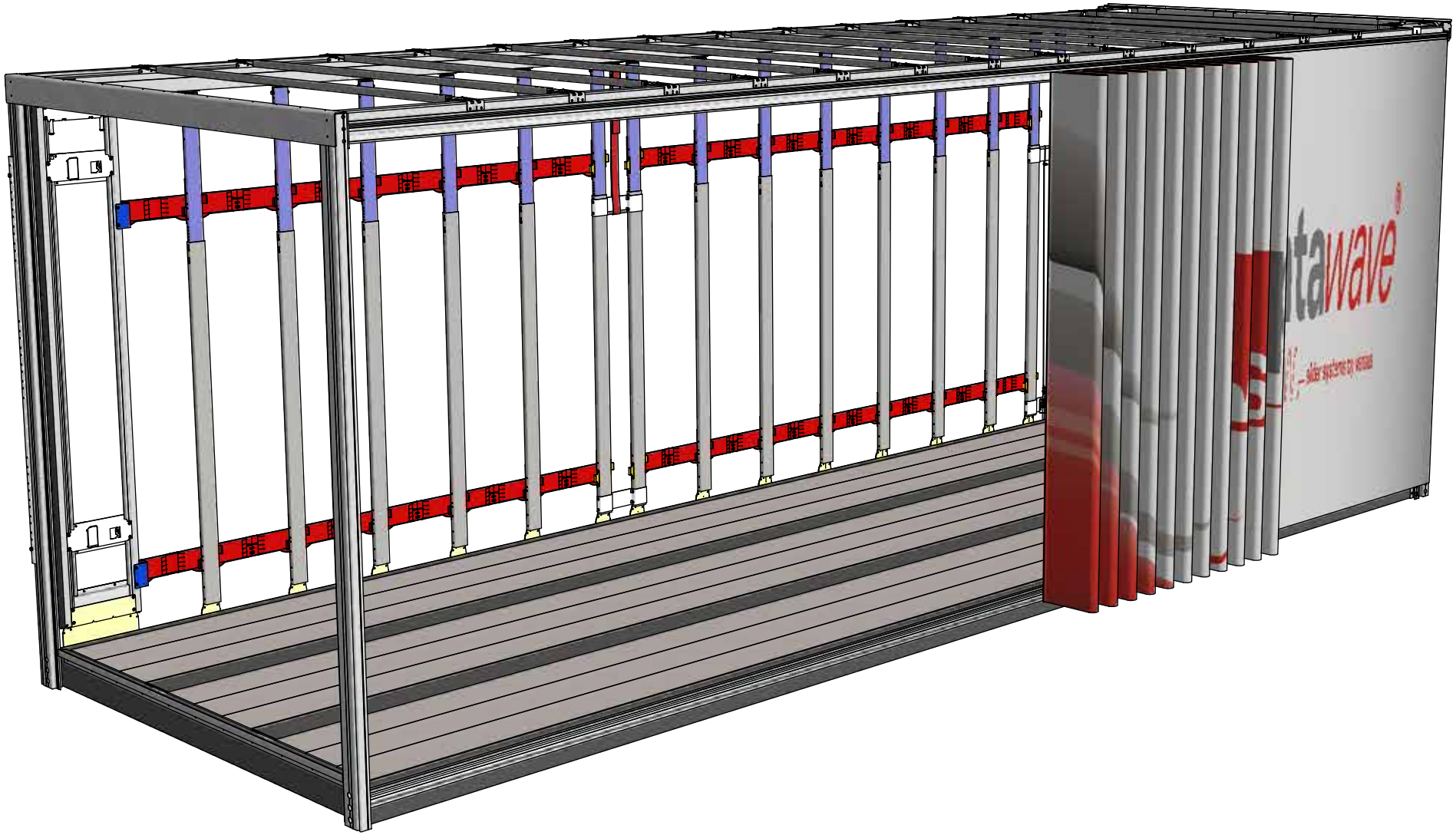
tawave

kit7500+

in box systems by versus

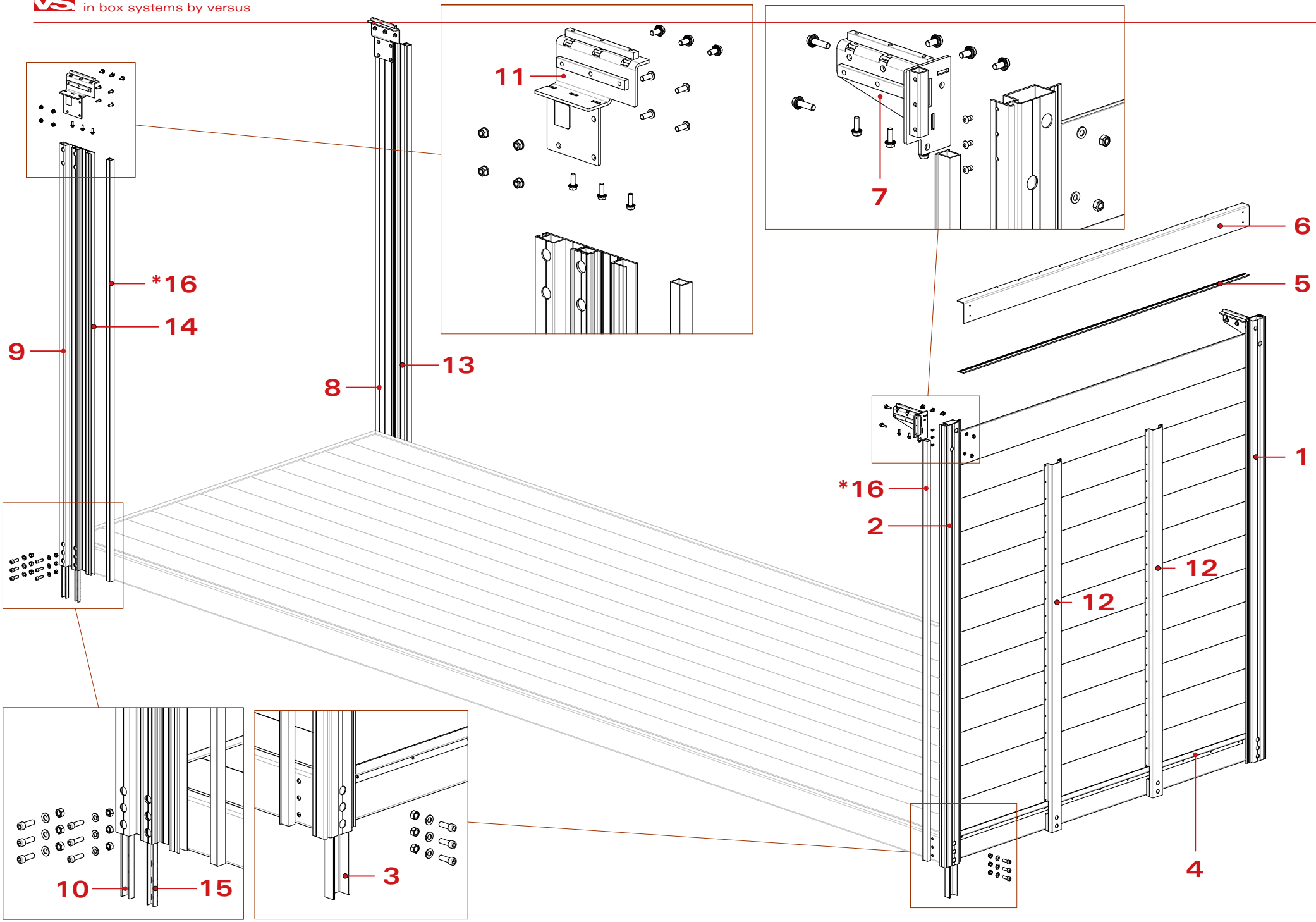
11
7
6
5
*16
14
9
13
8
1
*16
2
12
12
4
10
15
3

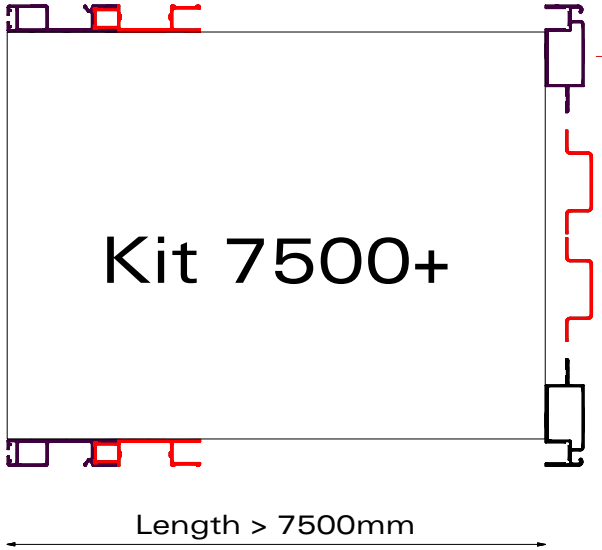

Nr.	Part Nr.	Qty	Description
1	452-01110	1	Front corner left / Al / L = 3000mm
2	452-01111	1	Front corner right / Al / L = 3000mm
3	154-03037	1	Set reinforcements front corners with bolts
4	452-04002	1	Bottom profile for wall mounting
5	451-04001	1	Sealing profile bulkhead
6	452-30260	1	Connecting profile bulkhead
7a	154-03030	1	Mounting set front Duo rail
7b	154-03031	1	Mounting set front Micro rail
8	402-02105	1	Rear corner left / Al / L = 3000mm
9	402-02106	1	Rear corner right / Al / L = 3000mm
10	154-03038	1	Set reinforcements rear corners with bolts
11a	154-03032	1	Mounting set rear Duo rail
11b	154-03033	1	Mounting set rear Micro rail
12	154-03036	2	Bulkhead support with bolts
13	452-01114	1	Side profile rear corner left
14	452-01115	1	Side profile rear corner right
15	152-02021	2	Reinforcement side profile
*16	452-01124	4	Aluminium insert for corner profiles

* Only needed with Penta sliders!

Mounting set rear Duo rail

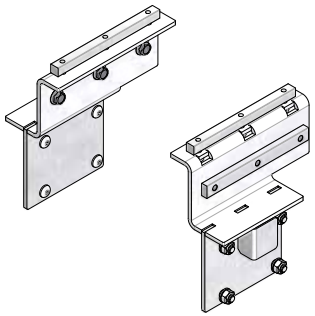

PART NR.

Set	154-03032

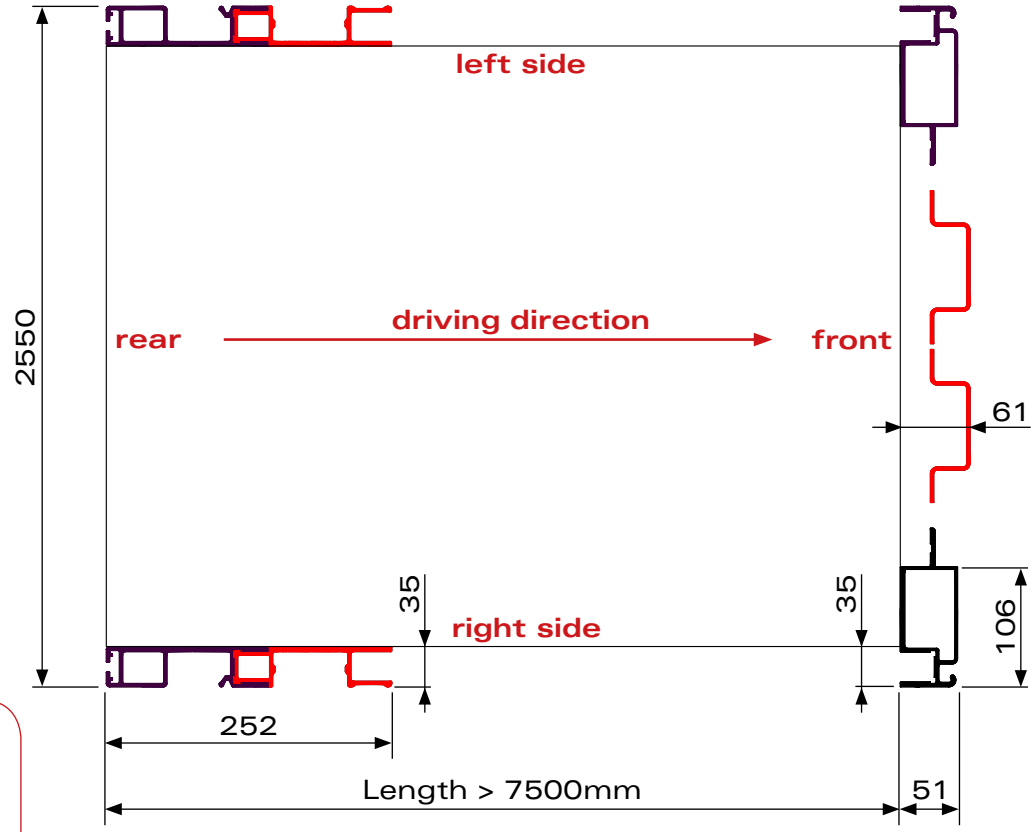

Mounting set front Duo rail

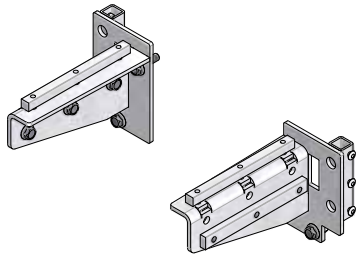

PART NR.

Set	154-03030

Rear corners L = 3m

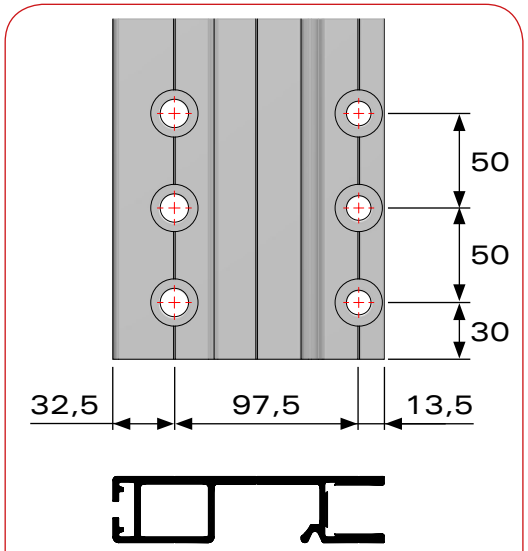

PART NR.

Left	402-02105
Right	402-02106

Set bulkhead support

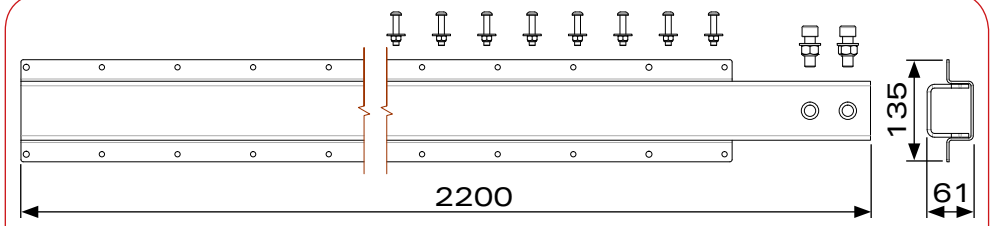

PART NR.

154-03036

Front corners L = 3m

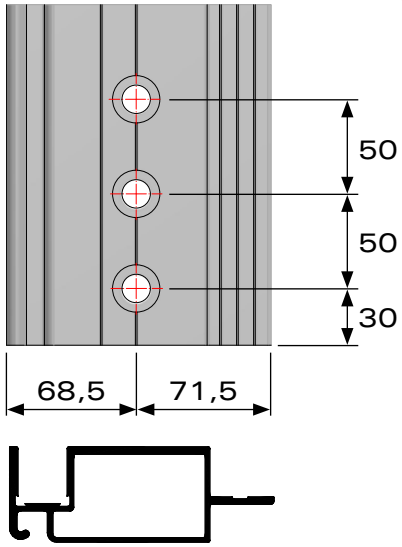

PART NR.

Left	452-01110
Right	452-01111

Mounting set rear Micro rail

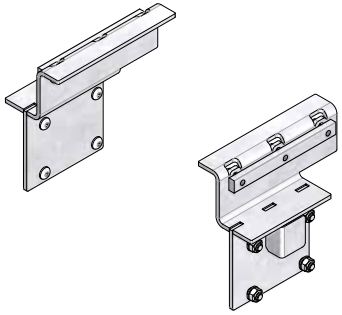

PART NR.

Set	154-03033

Mounting set front Micro rail

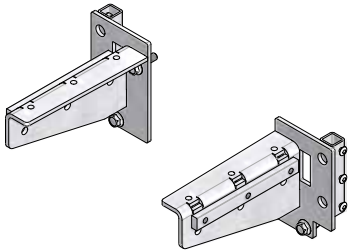

PART NR.

Set	154-03031

Al insert for corner profiles

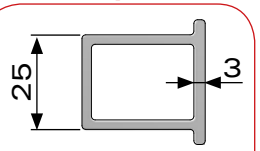

PART NR.

452-01124

* Only needed by Penta sliders!

Set reinforcements front corners

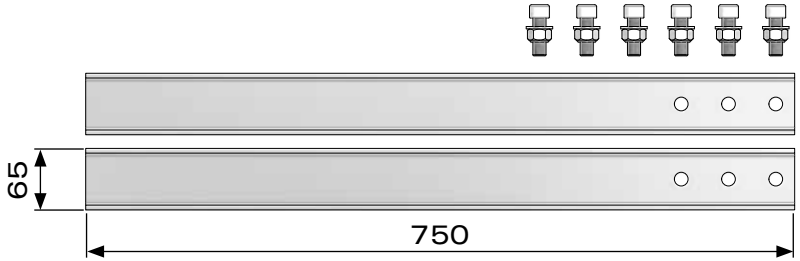

PART NR.

154-03037

Bottom profile

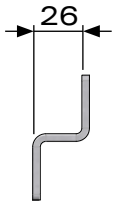

PART NR.

452-04002

Set reinforcements rear corners

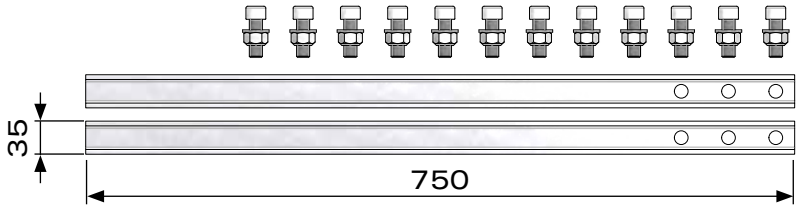

PART NR.

154-03038

Side profile L = 3m

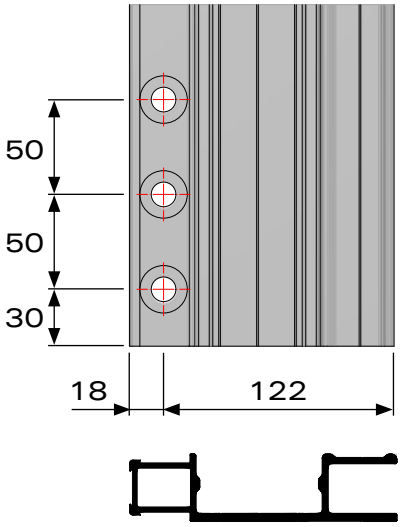

PART NR.

Left	452-01114
Right	452-01115

Connecting profile bulkhead

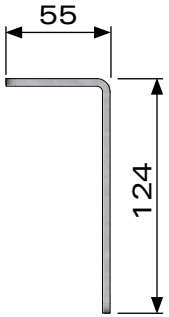

PART NR.

452-30260

Sealing profile bulkhead

PART NR.

451-04001

Set reinforcements side profile

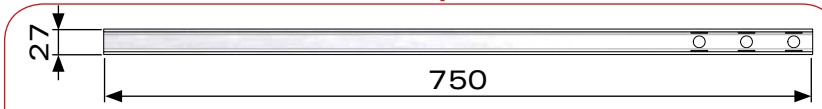

PART NR.

152-02021

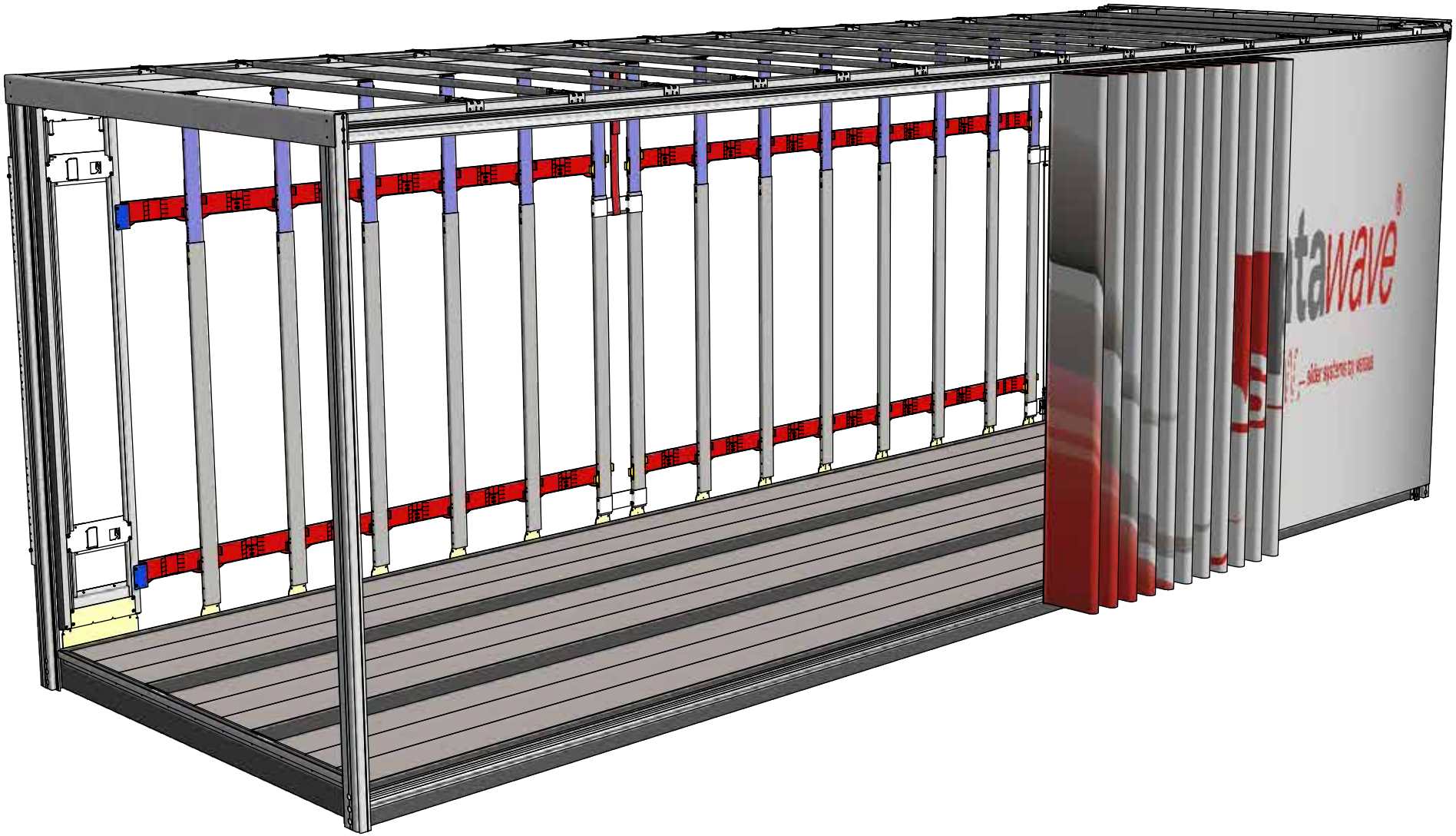
ita wave

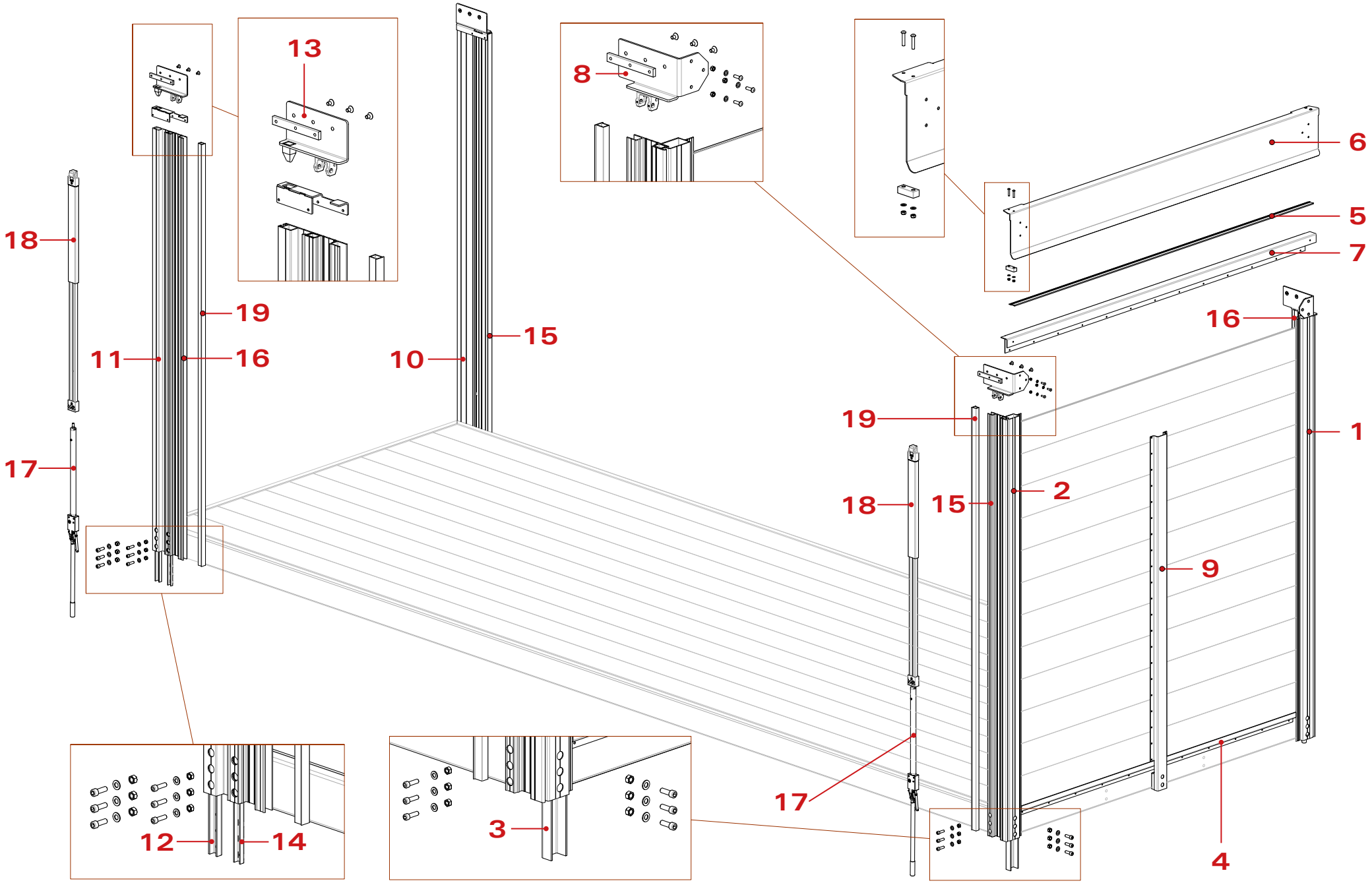
13
8
6
5
7
18
19
11
16
10
15
16
19
1
17
18
15
2
9
17
12
14
3
4

Nr.	Part Nr.	Qty	Description
1	452-01110	1	Front corner left / Al / L = 3000mm
2	452-01111	1	Front corner right / Al / L = 3000mm
3	154-03037	1	Set reinforcements front corners with bolts
4	452-04002	1	Bottom profile for wall mounting
5	451-04001	1	Sealing profile bulkhead
6	451-10001	1	Upperbeam set lifting roof Alto Trike Light
7	452-10002	1	Connecting profile lifting roof wall
8	154-03043	1	Mounting set front Alto Trike Light
9	154-03036	1	Bulkhead support with bolts
10	402-02105	1	Rear corner left / Al / L = 3000mm
11	402-02106	1	Rear corner right / Al / L = 3000mm
12	154-03038	1	Set reinforcements rear corners with bolts
13	154-03044	1	Mounting set rear Alto Trike Light
14	152-02021	2	Reinforcement side profile
15	452-01114	2	Side profile rear corner left
16	452-01115	2	Side profile rear corner right
17	802-01007	4	Pump Hydraman
18	144-10095	4	Set connect Hydraman
*19	452-01124	4	Aluminium insert for corner profiles

* Only needed with Penta sliders!

Mounting set rear Alto Trike Light rail

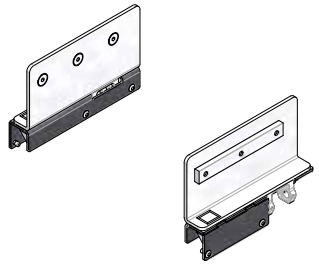

PART NR.

Set	154-03044

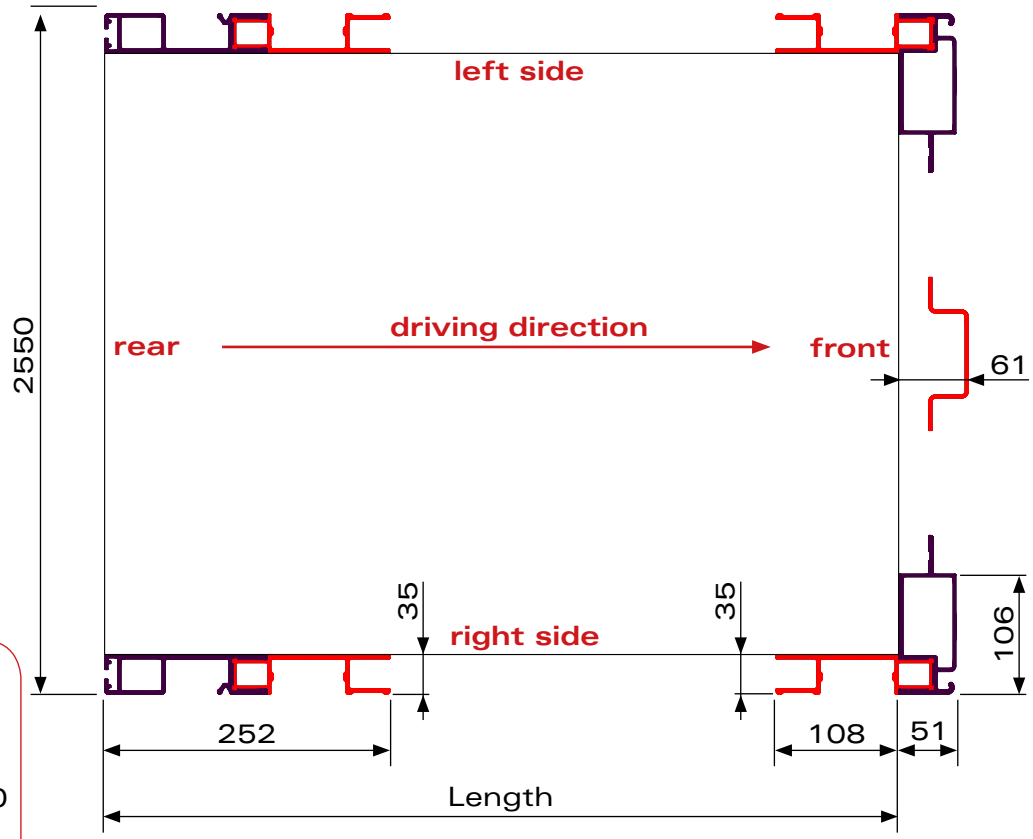

Mounting set front Alto Trike Light rail

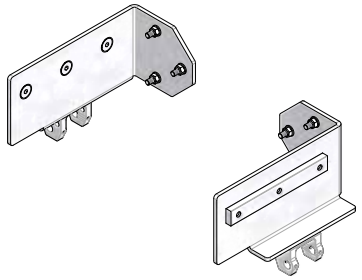

PART NR.

Set	154-03043

Rear corners L = 3m

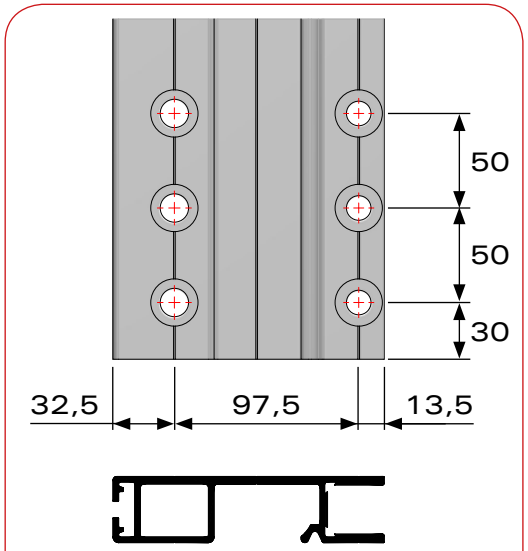

PART NR.

Left	402-02105
Right	402-02106

Set bulkhead support

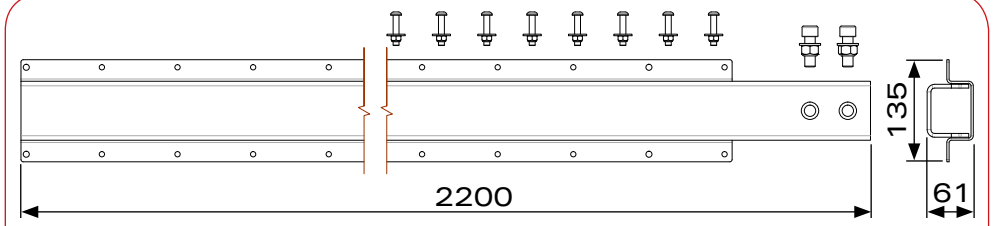

PART NR.

154-03036

Front corners L = 3m

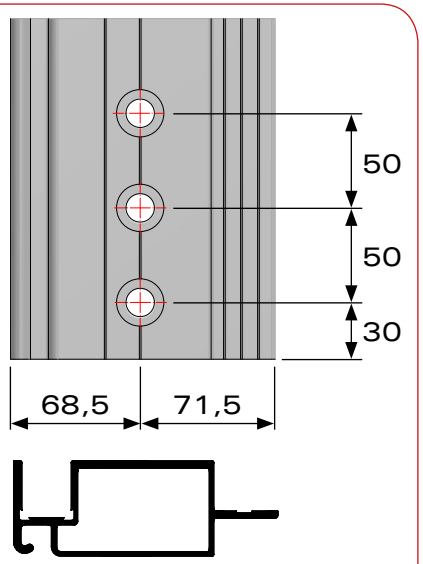

PART NR.

Left	452-01110
Right	452-01111

Set upperbeam lifting roof Alto Trike Light

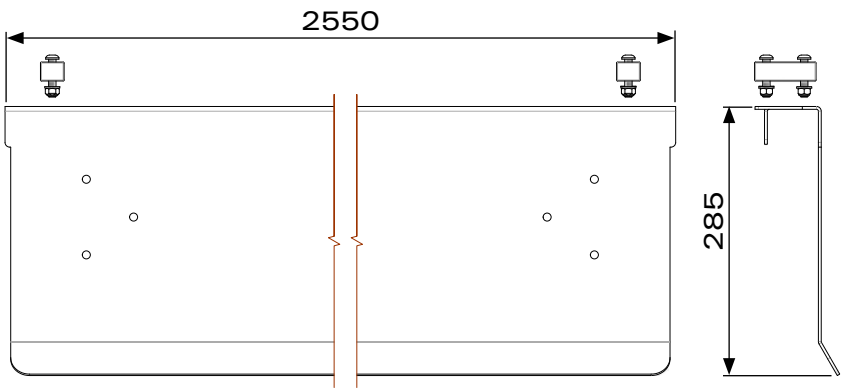

PART NR.

Set	451-10001

Al insert for corner profiles

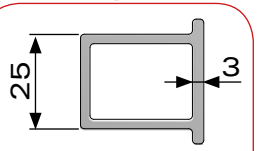

PART NR.

452-01124

* Only needed by Penta sliders!

Set reinforcements front corners

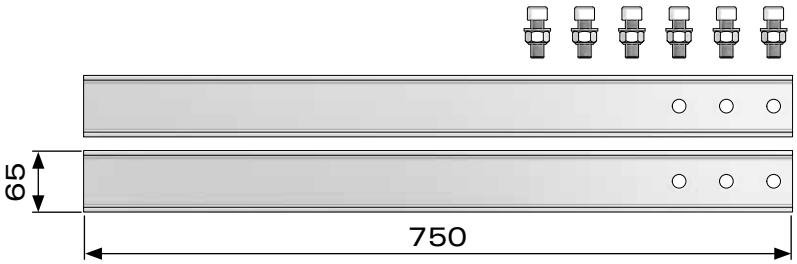

PART NR.

154-03037

Bottom profile

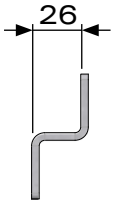

PART NR.

452-04002

Set reinforcements rear corners

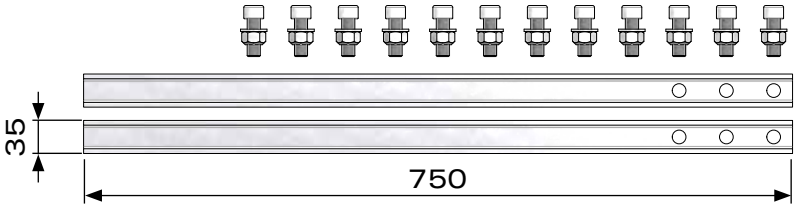

PART NR.

154-03038

Side profile L = 3m

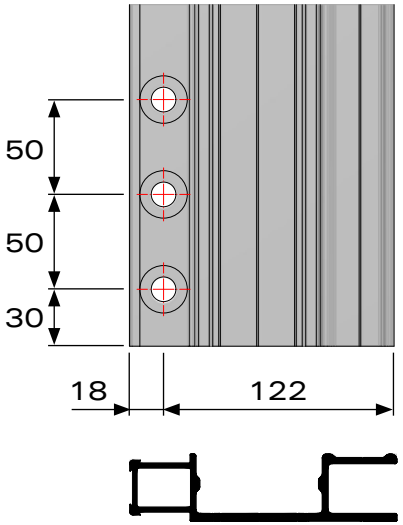

PART NR.

Left	452-01114
Right	452-01115

Connecting profile lifting roof wall

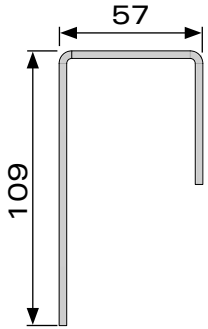

PART NR.

452-10002

Sealing profile bulkhead

PART NR.

451-04001

Set reinforcements side profile

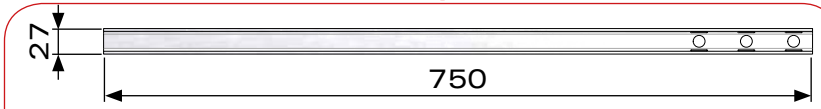

PART NR.

152-02021

Versus-Omega
Nijverheidslaan 1527a
B-3660 Opglabbeek
Belgium

t. +32 89 320 190
f. +32 89 320 199
e. info@versus-omega.com
w. www.versus-omega.com